EANCOM® 2002 S3

PRICAT

Price/sales catalogue message

Edition 2016 Upd. 2021

1. Introduction 2
2. Message Structure Chart 5
3. Branching Diagram 9
4. Segments Description 27
5. Segments Layout 40
6. Example(s) 218

1. Introduction

Status

MESSAGE TYPE	: PRICAT
REFERENCE DIRECTORY	: D.01B
EANCOM® SUBSET VERSION	: 009

Definition

A message to enable the transmission of information regarding pricing and catalogue details for goods and services offered by a seller to a buyer. The message can also be sent from a buyer to a seller to specify special requirements such as buyer labelling or packaging requirements, or to provide a response (acceptance or rejection) to a previously received Price/Sales Catalogue.

Principles

The article information transmitted with the Price/Sales Catalogue message is intended to be used for reference by the trading partners in subsequent EDI interchanges of commercial messages.

The Price/Sales Catalogue message indicates descriptive, logistic and pricing information by individual product. Depending on the agreement between trading partners, the message might indicate only general information about the products, valid for all customers. However, the same message can be used to provide a customer with information specific to him, i.e. prices and special conditions.

Product information can be provided as a complete listing of all supplier's products or as an advance warning of particular changes.

The Price/Sales Catalogue message can also be used by suppliers to feed a central catalogue of products, making the information available to all interested parties. In addition, interested parties may be provided with information from a central catalogue or database of products by means of the Price/Sales Catalogue message.

Optionally, products can be grouped by supplier or manufacturer. In this case the supplier is identified in the NAD-CTA loop following PGI. If no grouping of products is required, the detail section starts with one occurrence of PGI.

Each individual item, Consumer Unit, Traded Unit or Despatch Unit is described in the LIN segment group. Components of a Despatch Unit or Traded Unit can be referenced to using the sub-lines function of the LIN segment, and, additional repeats of the LIN segment group to describe the unit (see * Structure below).

The Price/Sales Catalogue message can be used to indicate specific action. This is implemented by use of the message function code in the BGM segment and the action request code in the LIN segment. These action codes can be used to change, add, delete and confirm product information in the detail section of the message.

The message function code in the BGM segment is used to indicate that all the items in the Price/Sales Catalogue have the same action required. In this case the action request code in the LIN segment should correspond to the functionality of the message function code in the BGM segment. Otherwise, the functionality indicated in the LIN segment will override the functionality indicated in the BGM segment.

When using the Price/Sales Catalogue message to provide a response the message sender may indicate three types of information;

- The total acceptance of a previous Price/Sales Catalogue message. In this instance only mandatory segments and segments identifying the parties and the message being responded need to be transmitted. The acceptance of the message is indicated using data element 1225 (code value ‘29, Accepted without change’) in the BGM segment.

- The total rejection of a previous Price/Sales Catalogue message. In this instance only mandatory segments and segments identifying the parties and the message being responded need to be transmitted. The rejection of the message is indicated using data element 1225 (code value ‘27, Not accepted’) in the BGM segment.

- The proposed change of information at either a product group level or at an individual product level. Where changes take place it is recommended that all of the information related to the level being changed be

1. Introduction

retransmitted for confirmation purposes e.g. at PGI level all segments, at LIN level all segments. At product level data element 1229 in the LIN segment must be set to '3, Change'. Reference to a specific line being responded to is achieved through the use of a combination of the reference to the original document (either at heading or PGI level) and in the RFF at detail level using DE 1156 'Line number'. The FTX segment at the PGI and LIN levels may be used to provide explanation, either in coded or free form, as to why the information is being changed. Information at PGI or LIN level not re-transmitted is automatically accepted by default. Accepted information at product level may also be explicitly indicated using the code value '4, No change', in data element 1229 in the LIN segment.

Structure

The structure of the Price/Sales Catalogue message has been designed to allow for the description of standard groupings (mixed assortments) of different articles and/or to provide the description of the logistic/packaging hierarchy for a product or group of products.

Both these functionalities are achieved by means of the usage of extra repeats of the Line Item (LIN) segment and, any other segments in the LIN segment group required for detail purposes, e.g., QTY segment, in the detail section of the message.

Standard mixed assortments are identified using the sub-lining function in the LIN, and the other segments within the LIN segment group providing the identities and quantities of the component products of the mixed assortment.

Should the component products of a mixed assortment change, the Addition, Deletion, Change and No Change action request codes in the LIN segment can be used to update a partner's file or central catalogue.

When describing a logistic group the first occurrence of the LIN segment will always refer to the consumer unit or smallest non-divisible unit, the second occurrence of LIN to the next upper level unit (e.g. a traded or despatch unit), and so on.

Describing a logistic hierarchy is best illustrated with an example:

Consumer Unit (GTIN smallest non-divisible item)

Traded Unit (12 Consumer Units)

Despatch Unit (50 Traded Units)

Consumer Unit		**In line 1**
LIN+1...	=	Identity of the Consumer Unit - No Sub-lines set.
PIA		
. . .	=	Description of the consumer unit in terms of additional identities, measurements, allowances or charges, additional prices, etc.
PAC		
PAT		

Traded Unit		**In line 2**
LIN+2...	=	Identity of Traded Unit.
PIA		
. . .	=	Description of the traded unit in terms of additional identities, measurements, allowances or charges, additional prices, etc.

1. Introduction

PAC		
PAT		
LIN+3...	=	Identity of Consumer Unit inside the Traded Unit, Sub-line used to establish a link between the Traded and Consumer Units.
PIA		
QTY	=	Number of Consumer Units within the Traded Unit.

Despatch Unit		**In main line 3**
LIN+ 4...	=	Identity of Despatch Unit.
PIA		
. . .	=	Description of Despatch Unit in terms of additional identities, measurements, allowances or charges, additional prices, etc.
PAC		
PAT		
LIN+5...	=	Identity of Traded Unit inside the Despatch Unit, Sub-line used set to establish a link between the Despatch and Traded Units.
PIA		
QTY	=	Number of Traded Units within the Despatch Unit.

Please Note
that there are more extensive examples and also explanations on the use of sub-lines in PART I, SECTION 4.11 and in the examples section of this message (immediately after the segment's description).

2. Message Structure Chart

EANCOM® 2002 S3 Edition 2016 Upd. 2021 Part II
PRICAT Price/sales catalogue message

UNA		1	C	1	- Service string advice
UNB		2	M	1	- Interchange header

Price/Sales Catalogue Heading Section

UNH		3	M	1	- Message header
BGM		4	M	1	- Beginning of message
DTM		5	M	35	- Date/time/period
FTX		6	C	99	- Free text
SG1			C	99	- RFF-DTM
RFF		7	M	1	- Reference
DTM		8	C	5	- Date/time/period
SG2			C	99	- NAD-SG3-SG4
NAD		9	M	1	- Name and address
SG3			C	10	- RFF
RFF		10	M	1	- Reference
SG4			C	5	- CTA-COM
CTA		11	M	1	- Contact information
COM		12	C	5	- Communication contact
SG5			C	5	- TAX
TAX		13	M	1	- Duty/tax/fee details
SG6			C	20	- CUX-DTM
CUX		14	M	1	- Currencies
DTM		15	C	5	- Date/time/period
SG7			C	10	- PAT-PCD
PAT	X	16	M	1	- Payment terms basis
PCD		17	C	1	- Percentage details
SG8			C	10	- TDT
TDT		18	M	1	- Details of transport
SG9			C	5	- TOD-LOC
TOD		19	M	1	- Terms of delivery or transport
LOC		20	C	2	- Place/location identification
SG10			C	10	- ALC-ALI-DTM-SG11-SG12-SG13-SG14-SG15
ALC		21	M	1	- Allowance or charge
ALI		22	C	5	- Additional information
DTM		23	C	9	- Date/time/period
SG11			C	10	- QTY-RNG
QTY		24	M	1	- Quantity
RNG		25	C	1	- Range details
SG12			C	10	- PCD-RNG
PCD		26	M	1	- Percentage details
RNG		27	C	1	- Range details
SG13			C	10	- MOA-RNG
MOA		28	M	1	- Monetary amount
RNG		29	C	1	- Range details
SG14			C	10	- RTE-RNG
RTE		30	M	1	- Rate details
RNG		31	C	1	- Range details
SG15			C	5	- TAX-MOA
TAX		32	M	1	- Duty/tax/fee details
MOA		33	C	1	- Monetary amount
SG16	+		C	9	- TRU-DTM
TRU	+	34	M	1	- Technical rules
DTM	+	35	C	9	- Date/time/period

Price/Sales Catalogue Detail Section

2. Message Structure Chart

EANCOM® 2002 S3 **Edition 2016 Upd. 2021** **Part II**
PRICAT Price/sales catalogue message

SG17			C	1000	- PGI-DTM-QTY-ALI-FTX-SG18-SG19-SG20-SG21-SG27-SG30-SG31
PGI		36	M	1	- Product group information
DTM		37	C	15	- Date/time/period
QTY		38	C	10	- Quantity
ALI		39	C	5	- Additional information
FTX		40	C	5	- Free text
SG18			C	10	- CUX-DTM
CUX		41	M	1	- Currencies
DTM		42	C	5	- Date/time/period
SG19	*		C	100	- PRI-CUX-APR-RNG-DTM
PRI		43	M	1	- Price details
CUX	+	44	C	1	- Currencies
APR	+	45	C	99	- Additional price information
RNG		46	C	1	- Range details
DTM		47	C	5	- Date/time/period
SG20			C	10	- TAX-MOA
TAX		48	M	1	- Duty/tax/fee details
MOA		49	C	1	- Monetary amount
SG21			C	99	- ALC-ALI-SG22-SG23-SG24-SG25-SG26
ALC		50	M	1	- Allowance or charge
ALI		51	C	5	- Additional information
SG22			C	1	- QTY-RNG
QTY		52	M	1	- Quantity
RNG		53	C	1	- Range details
SG23			C	1	- PCD-RNG
PCD		54	M	1	- Percentage details
RNG		55	C	1	- Range details
SG24			C	2	- MOA-RNG
MOA		56	M	1	- Monetary amount
RNG		57	C	1	- Range details
SG25			C	1	- RTE-RNG
RTE		58	M	1	- Rate details
RNG		59	C	1	- Range details
SG26			C	5	- TAX-MOA
TAX		60	M	1	- Duty/tax/fee details
MOA		61	C	1	- Monetary amount
SG27			C	20	- NAD-LOC-SG28-SG29
NAD		62	M	1	- Name and address
LOC		63	C	5	- Place/location identification
SG28			C	10	- RFF-DTM
RFF		64	M	1	- Reference
DTM		65	C	5	- Date/time/period
SG29			C	5	- CTA-COM
CTA		66	M	1	- Contact information
COM		67	C	5	- Communication contact
SG30			C	10	- PAT-PCD
PAT	X	68	M	1	- Payment terms basis
PCD		69	C	1	- Percentage details
SG31			C	10	- TDT
TDT		70	M	1	- Details of transport
SG32			C	5	- TOD-LOC
TOD		71	M	1	- Terms of delivery or transport
LOC		72	C	2	- Place/location identification
SG33			C	10	- PAC-MEA
PAC		73	M	1	- Package

2. Message Structure Chart

EANCOM® 2002 S3 **Edition 2016 Upd. 2021** **Part II**
PRICAT Price/sales catalogue message

MEA		74	C	10	- Measurements
SG34	+		C	99	- EFI-CED-COM-RFF-DTM-QTY
EFI	+	75	M	1	- External file link identification
CED	+	76	C	99	- Computer environment details
COM		77	C	9	- Communication contact
RFF	+	78	C	9	- Reference
DTM	+	79	C	9	- Date/time/period
QTY	+	80	C	9	- Quantity
SG35	+		C	9	- TRU-DTM
TRU	+	81	M	1	- Technical rules
DTM	+	82	C	9	- Date/time/period
SG36			C	999999	- LIN-PIA-IMD-MEA-QTY-HAN-ALI-DTM-RFF-LOC-FTX-SG37-SG38-S
LIN		83	M	1	- Line item
PIA		84	C	99	- Additional product id
IMD		85	C	999	- Item description
MEA		86	C	10	- Measurements
QTY		87	C	10	- Quantity
HAN		88	C	5	- Handling instructions
ALI		89	C	5	- Additional information
DTM		90	C	10	- Date/time/period
RFF		91	C	99	- Reference
LOC		92	C	1	- Place/location identification
FTX		93	C	999	- Free text
SG37	+		C	999	- CCI-CAV-MEA
CCI	+	94	M	1	- Characteristic/class id
CAV	+	95	C	10	- Characteristic value
MEA	+	96	C	10	- Measurements
SG38			C	10	- TAX-MOA
TAX		97	M	1	- Duty/tax/fee details
MOA		98	C	1	- Monetary amount
SG40	*		C	100	- PRI-CUX-APR-RNG-DTM-LOC
PRI		99	M	1	- Price details
CUX		10	C	1	- Currencies
APR		10	C	99	- Additional price information
RNG		10	C	1	- Range details
DTM		10	C	5	- Date/time/period
LOC	+	10	C	99	- Place/location identification
SG41			C	99	- ALC-ALI-DTM-SG42-SG43-SG44-SG45-SG46
ALC		10	M	1	- Allowance or charge
ALI		10	C	5	- Additional information
DTM		10	C	9	- Date/time/period
SG42			C	10	- QTY-RNG
QTY		10	M	1	- Quantity
RNG		10	C	1	- Range details
SG43			C	99	- PCD-RNG
PCD		11	M	1	- Percentage details
RNG		11	C	1	- Range details
SG44			C	10	- MOA-RNG
MOA		11	M	1	- Monetary amount
RNG		11	C	1	- Range details
SG45			C	10	- RTE-RNG
RTE		11	M	1	- Rate details
RNG		11	C	1	- Range details
SG46			C	5	- TAX-MOA
TAX		11	M	1	- Duty/tax/fee details

2. Message Structure Chart

EANCOM® 2002 S3 **Edition 2016 Upd. 2021** **Part II**
PRICAT Price/sales catalogue message

MOA		11	C	1	- Monetary amount
SG47			C	999	- PAC-MEA-HAN
PAC		11	M	1	- Package
MEA		11	C	10	- Measurements
HAN		12	C	5	- Handling instructions
SG48			C	10	- PAT-DTM-PCD-MOA
PAT	X	12	M	1	- Payment terms basis
DTM		12	C	5	- Date/time/period
PCD		12	C	1	- Percentage details
MOA		12	C	1	- Monetary amount
SG51	+		C	99	- EFI-CED-COM-RFF-DTM-QTY
EFI	+	12	M	1	- External file link identification
CED	+	12	C	99	- Computer environment details
COM		12	C	9	- Communication contact
RFF	+	12	C	9	- Reference
DTM	+	12	C	9	- Date/time/period
QTY	+	13	C	9	- Quantity
SG52	+		C	99	- NAD-SG53
NAD	+	13	M	1	- Name and address
SG53	+		C	99	- CTA-COM
CTA	+	13	M	1	- Contact information
COM	+	13	C	99	- Communication contact
SG54	+		C	9	- TRU-DTM
TRU	+	13	M	1	- Technical rules
DTM	+	13	C	9	- Date/time/period
SG55	+		C	9	- DGS-QTY-FTX
DGS	+	13	M	1	- Dangerous goods
QTY	+	13	C	9	- Quantity
FTX	+	13	C	9	- Free text
SG56	+		C	999	- HYN-PIA-QTY-SG58
HYN	+	13	M	1	- Hierarchy information
PIA	+	14	C	99	- Additional product id
QTY	+	14	C	9	- Quantity
SG58	+		C	9	- CCI-CAV-MEA
CCI	+	14	M	1	- Characteristic/class id
CAV	+	14	C	9	- Characteristic value
MEA	+	14	C	99	- Measurements

Price/Sales Catalogue Summary Section

UNT		14	M	1	- Message trailer
UNZ		14	M	1	- Interchange trailer

3. Branching Diagram

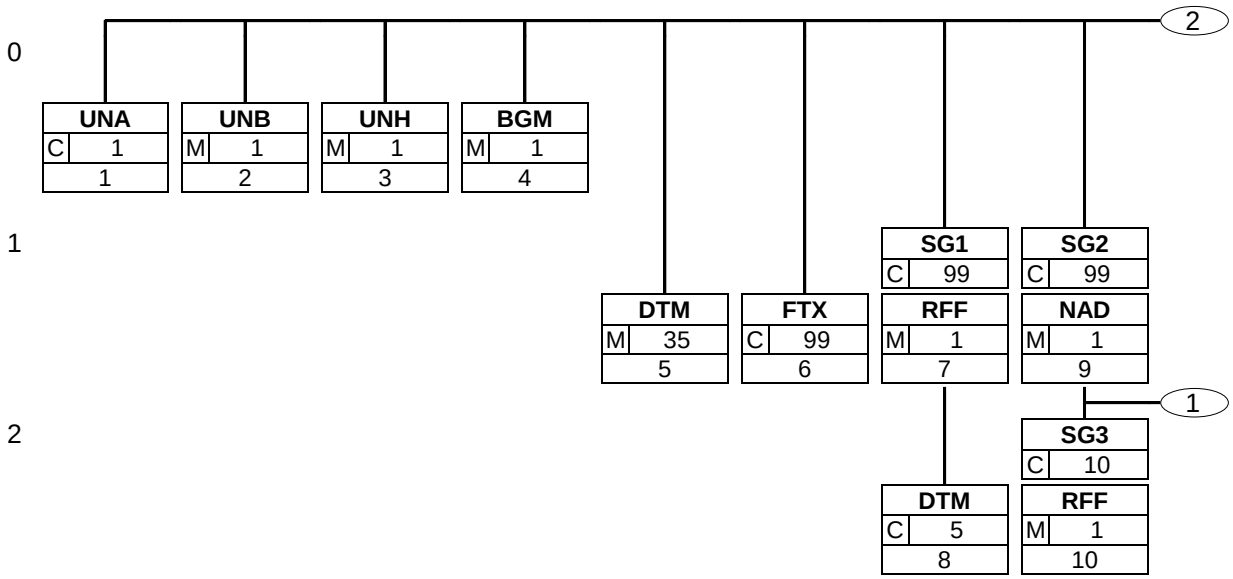

3. Branching Diagram

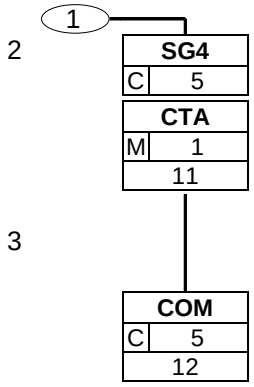

3. Branching Diagram

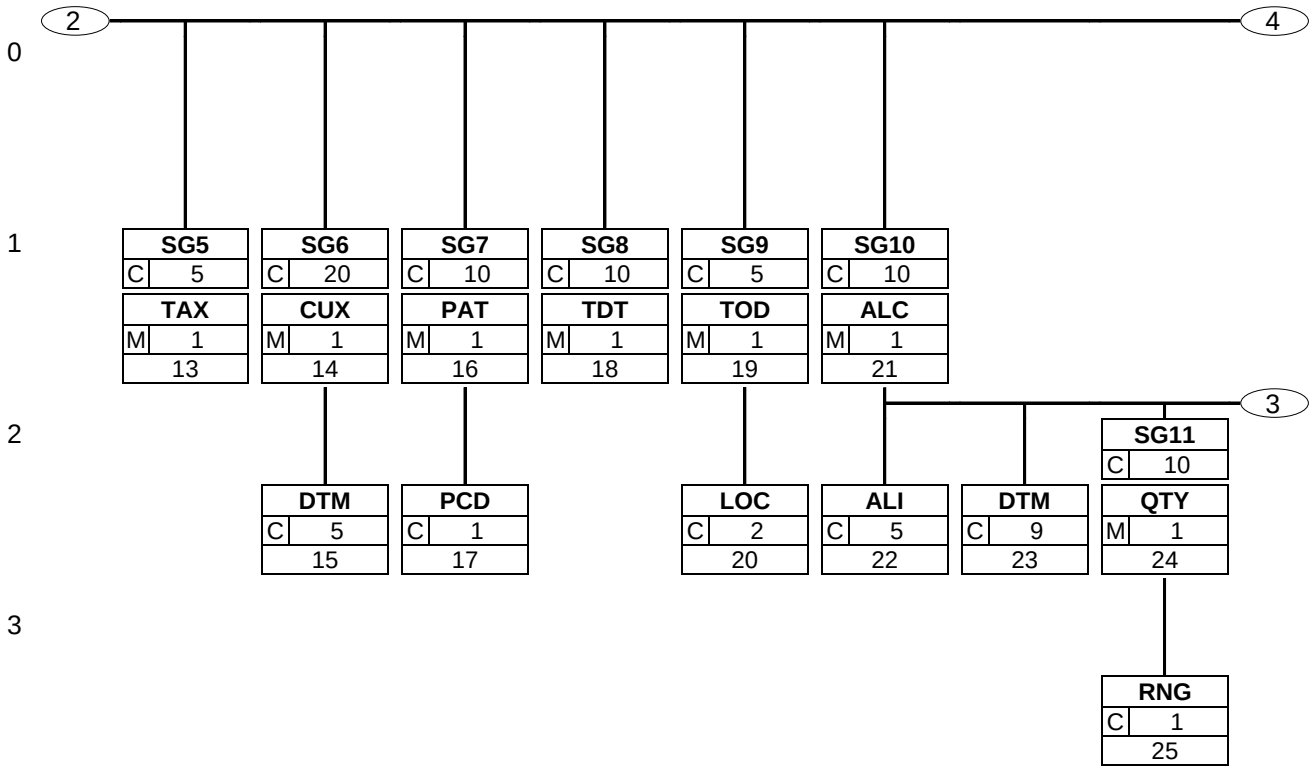

3. Branching Diagram

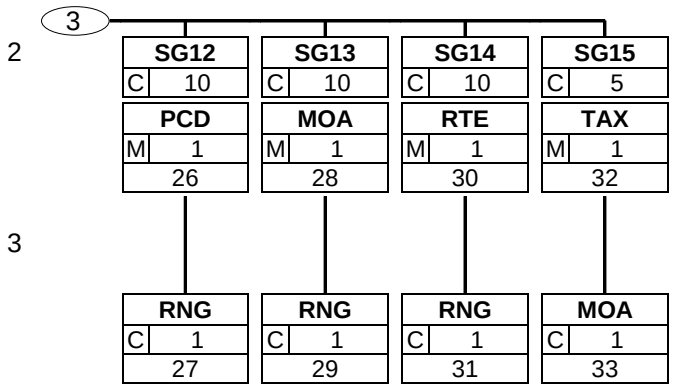

3. Branching Diagram

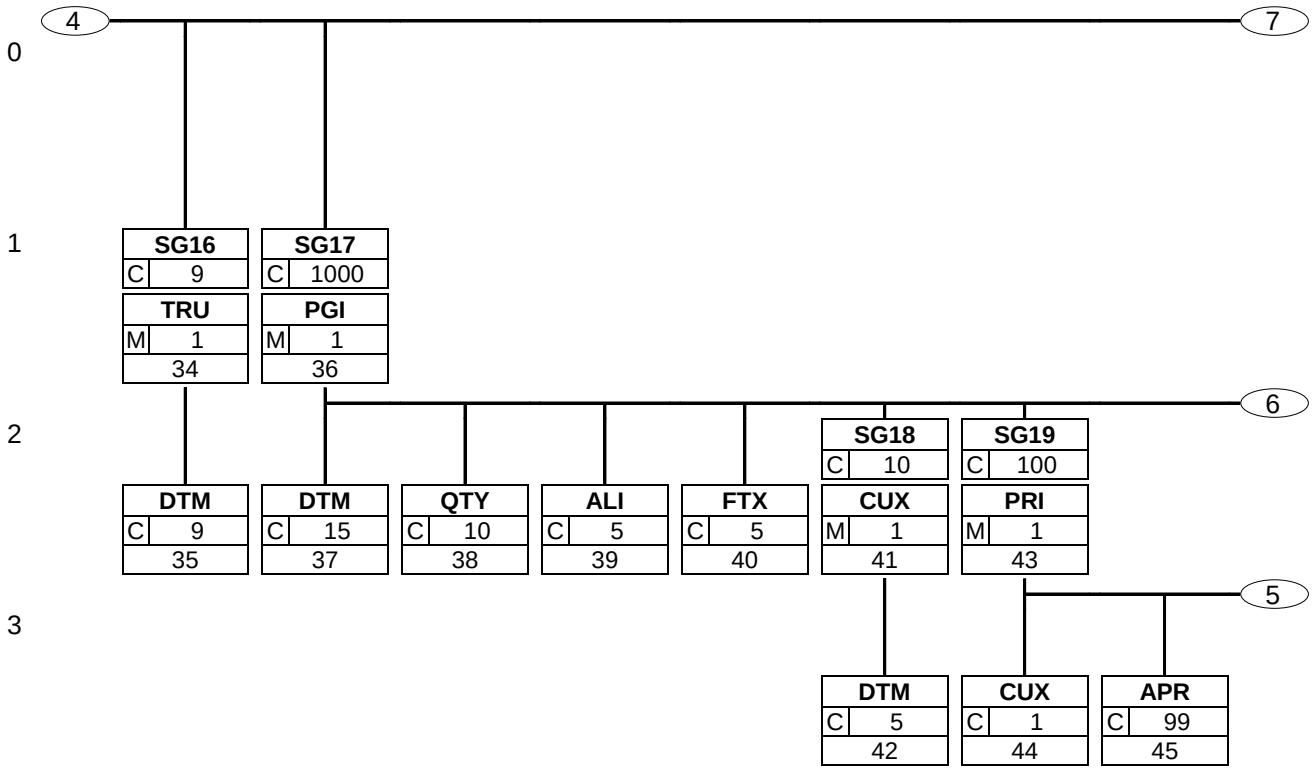

3. Branching Diagram

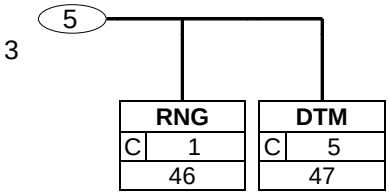

3. Branching Diagram

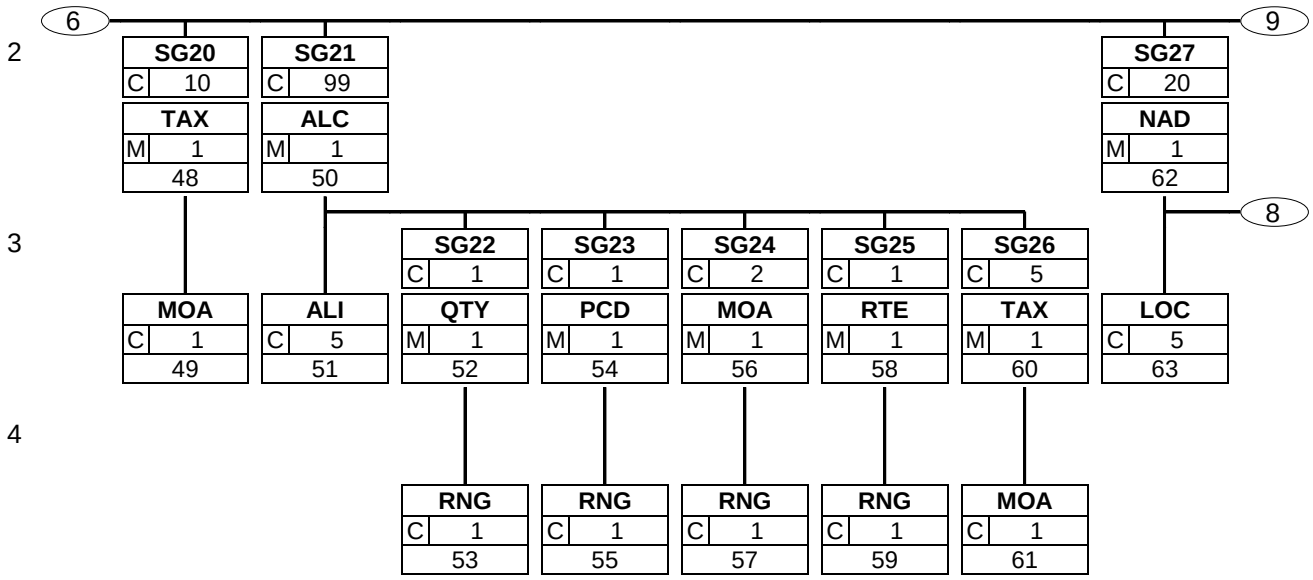

3. Branching Diagram

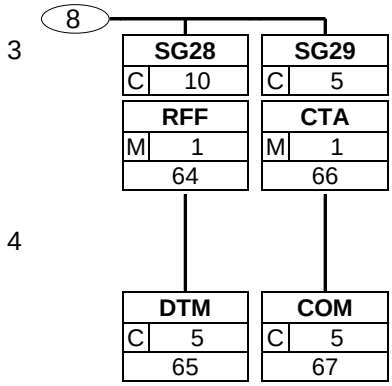

3. Branching Diagram

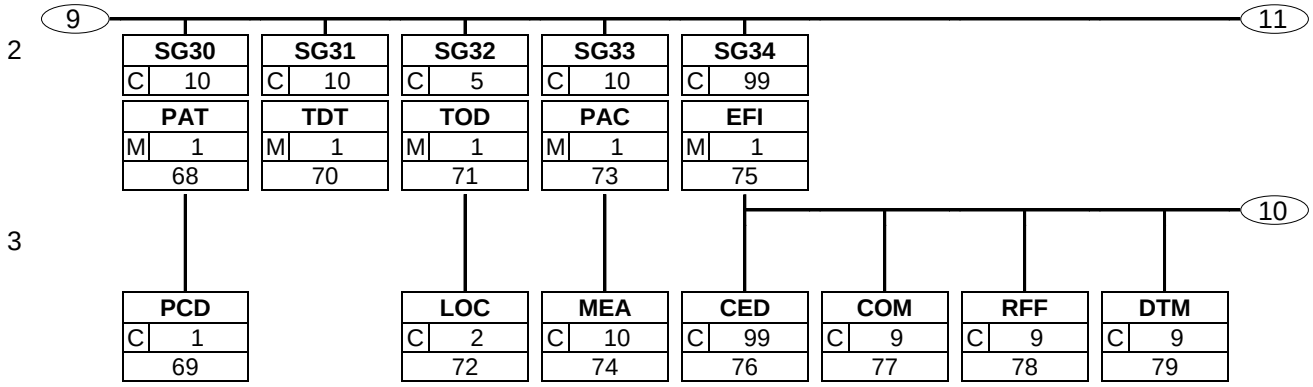

3. Branching Diagram

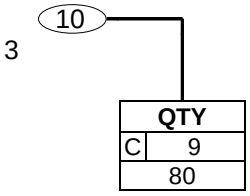

3. Branching Diagram

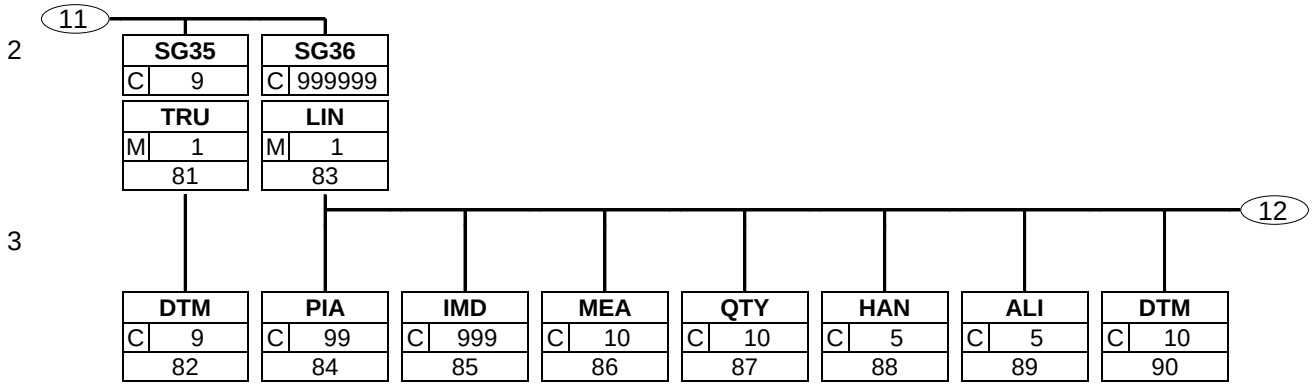

3. Branching Diagram

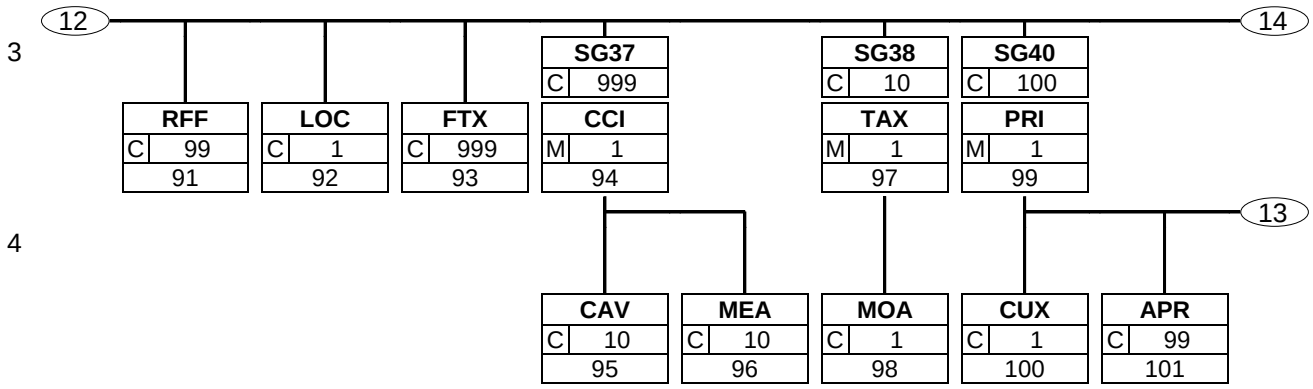

3. Branching Diagram

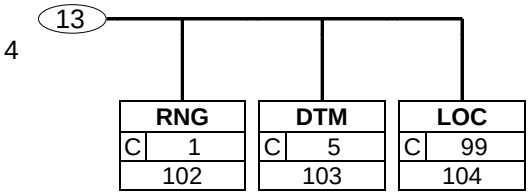

3. Branching Diagram

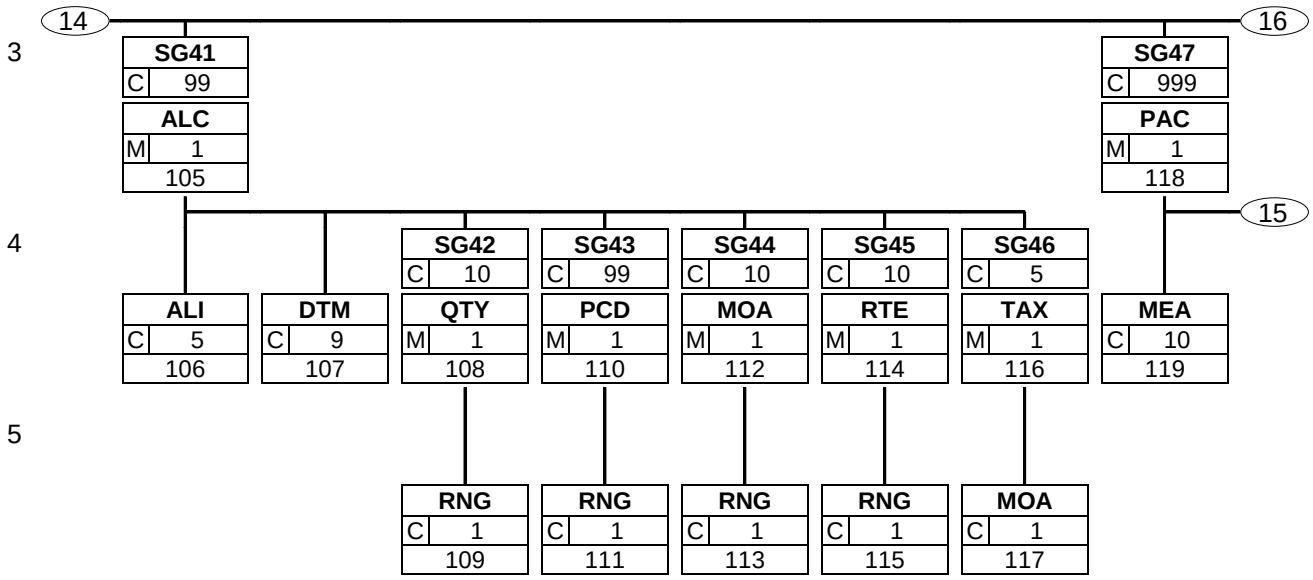

3. Branching Diagram

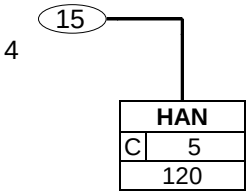

3. Branching Diagram

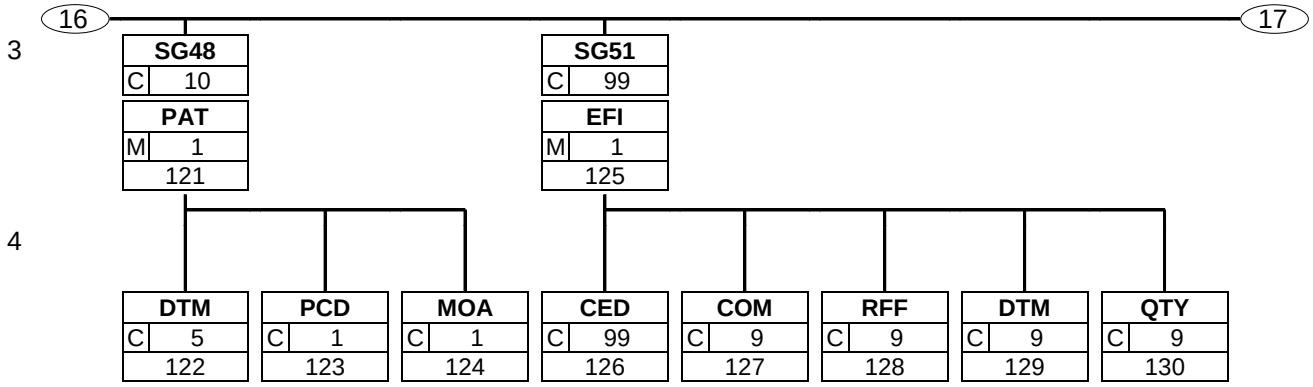

3. Branching Diagram

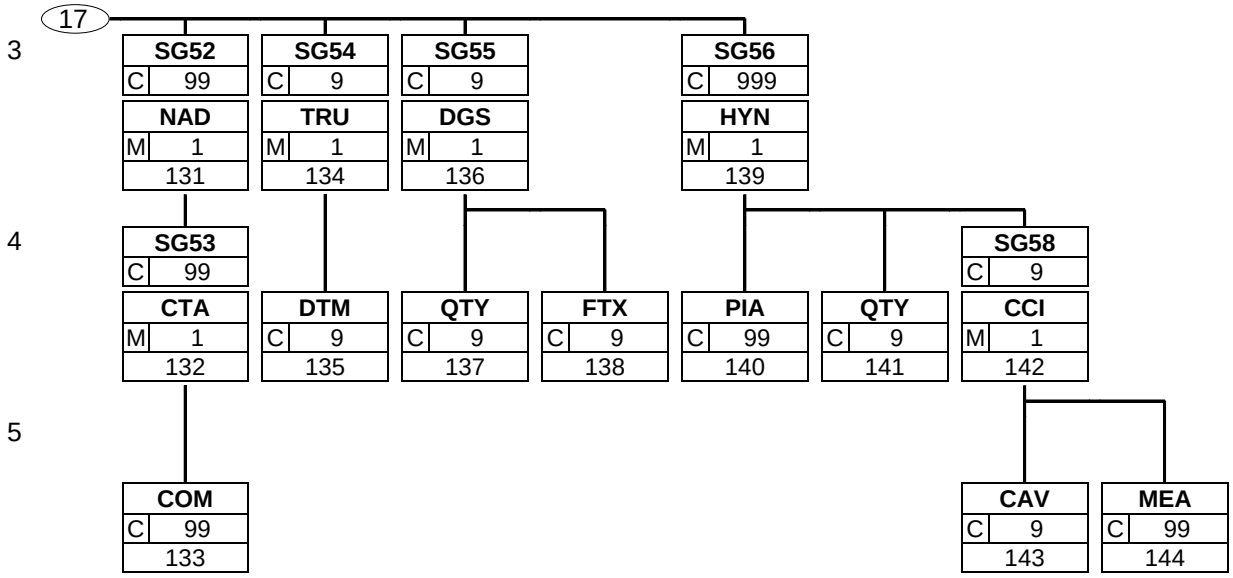

3. Branching Diagram

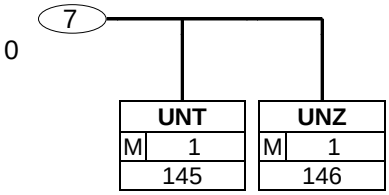

4. Segments Description

UNA - C 1 - Service string advice

The service string advice shall begin with the upper case characters UNA immediately followed by six characters in the order shown below. The same character shall not be used in more than one position of the UNA.

UNB - M 1 - Interchange header

This segment is used to envelope the interchange, as well as to identify both, the party to whom the interchange is sent and the party who has sent the interchange. The principle of the UNB segment is the same as a physical envelope which covers one or more letters or documents, and which details, both the address where delivery is to take place and the address from where the envelope has come.

Price/Sales Catalogue Heading Section

UNH - M 1 - Message header

This segment is used to head, identify and specify a message.

BGM - M 1 - Beginning of message

This segment is used to indicate the type and function of a message and to transmit the identifying number.

DTM - M 35 - Date/time/period

This segment is used to specify the date or period of the Price/Sales Catalogue.

FTX - C 99 - Free text

This segment is used to provide any free text information related to the complete Price/Sales Catalogue message.

SG1 - C 99 - **RFF-DTM**

A group of segments for giving references and where necessary, their dates, relating to the whole message, e.g. request for price information.

RFF - M 1 - Reference

This segment is used to give references which apply to the complete message.

DTM - C 5 - Date/time/period

This segment is used to specify dates relating to the references given in the preceding RFF segment.

SG2 - C 99 - **NAD-SG3-SG4**

A group of segments identifying the parties with associated information relevant to the price/sales catalogue.

NAD - M 1 - Name and address

This segment is used to identify the trading partners involved in the Price/Sales Catalogue process. Identification of the buyer and supplier, or the central catalogue/data base, of goods or services is recommended in the Price/Sales Catalogue message.

SG3 - C 10 - **RFF**

A group of segments giving references only relevant to the specified party.

RFF - M 1 - Reference

This segment is used to indicate references related to the trading parties identified in the previous NAD segment.

SG4 - C 5 - **CTA-COM**

A group of segments giving contact details of the person or department within the party identified in the NAD segment.

CTA - M 1 - Contact information

This segment is used to identify the department and person within the party identified in the previous NAD segment.

4. Segments Description

COM - C 5	- Communication contact This segment is used to identify the communications number and the type of communications used for the contact identified in the previous CTA segment.
SG5 - C 5	- **TAX** A group of segments specifying tax related information, valid for the whole Price/ sales catalogue, e.g. Value Added Tax at the standard rate is applicable for all items.
TAX - M 1	- Duty/tax/fee details This segment is to be used to provide tax information applicable to the whole Price/Sales Catalogue.
SG6 - C 20	- **CUX-DTM** A group of segments specifying the currencies and related dates/periods valid for the whole Price/sales catalogue. Currency data maybe omitted in national applications but will be required for international transactions.
CUX - M 1	- Currencies This segment is used to specify the currencies in which the prices in the Price/Sales Catalogue are quoted and to specify the currencies for international trading.
DTM - C 5	- Date/time/period This segment is used to specify dates related to the previous CUX segment.
SG7 - C 10	- **PAT-PCD** A group of segments specifying the terms of payment applicable for the whole Price/sales catalogue.
PAT - M 1	- Payment terms basis This segment is used to provide payment terms to be specified which are applicable to all products contained in the message.
PCD - C 1	- Percentage details This segment is used to specify percentages related to the payment terms.
SG8 - C 10	- **TDT** A group of segments identifying the mode and means of transport relating to the whole Price/sales catalogue.
TDT - M 1	- Details of transport This segment is used to specify transport details which are applicable to all products contained in the message.
SG9 - C 5	- **TOD-LOC** A group of segments indicating the terms of delivery for the whole Price/sales catalogue.
TOD - M 1	- Terms of delivery or transport This segment is used to specify the terms of delivery for the complete Price/Sales Catalogue. When specifying terms of delivery it is recommended in EANCOM to use Incoterms.
LOC - C 2	- Place/location identification This segment is used to provide location applicable to the terms of delivery.
SG10 - C 10	- **ALC-ALI-DTM-SG11-SG12-SG13-SG14-SG15** A group of segments specifying allowances and charges for the whole Price/sales catalogue. The allowance or charge specified within this segment group relates to the total Price/sales catalogue. Where relevant, additional information, tax/fee details are to be indicated. The basis for the calculation of the allowance/charge may be a quantity, a percentage, an amount or a rate and one of the segment group 11-14 should be used accordingly.

4. Segments Description

ALC - M 1 - Allowance or charge

This segment is used to specify any allowances or charges related to the complete Price /Sales Catalogue.

ALI - C 5 - Additional information

This segment is used to indicate any special conditions related to the allowances and/or charges specified in the ALC segment.

DTM - C 9 - Date/time/period

This segment is used to indicate any dates related to the allowances or/charges information specified in the ALC segment.

SG11 - C 10 - **QTY-RNG**

A group of segments specifying the quantity of the allowance or charge with its measure unit specifier. A range to which the allowance or charge applies may be specified, e.g. An allowance of a free quantity of 20 pieces may be specified if the quantity of goods ordered is greater than 1000 pieces.

QTY - M 1 - Quantity

This segment is used to specify quantity allowances/charges applicable for the entire Price/Sales Catalogue.

RNG - C 1 - Range details

This segment is used to specify ranges which apply to the previous QTY segment.

SG12 - C 10 - **PCD-RNG**

A group of segments specifying the percentage for the allowance or charge, e.g. The allowance/charge amount is calculated as 5% of the goods value or a price reduction of 5% may be specified if the goods quantity ordered is within the range 5 tons to 10 tons.

PCD - M 1 - Percentage details

This segment is used to specify percentage allowances/charges applicable for the entire Price/Sales Catalogue.

RNG - C 1 - Range details

This segment is used to specify ranges which apply to the previous PCD segment.

SG13 - C 10 - **MOA-RNG**

A group of segments specifying a monetary amount for an allowance or charge. A range to which the allowance or charge applies can be specified, e.g. an allowance of 5000 EUR may be specified if goods value ordered is greater than 100000 EUR.

MOA - M 1 - Monetary amount

This segment is used to specify monetary amount allowances/charges applicable for the entire Price/Sales Catalogue.

RNG - C 1 - Range details

This segment is used to specify ranges which apply to the previous MOA segment.

SG14 - C 10 - **RTE-RNG**

A group of segments specifying the rate per unit and basis to which the allowance or charge applies, e.g. The allowance/charge rate is 3 EUR per 10 tons.

RTE - M 1 - Rate details

This segment is used to specify rate allowances/charges applicable for the entire Price/Sales Catalogue.

RNG - C 1 - Range details

This segment is used to specify ranges which apply to the previous RTE segment.

SG15 - C 5 - **TAX-MOA**

A group of segments of segments specifying tax related information for the allowance or charge.

4. Segments Description

TAX - M 1	- Duty/tax/fee details This segment is used to specify any taxes or duties which are due on the allowances or charges which have been specified for the entire Price/Sales Catalogue.	
MOA - C 1	- Monetary amount This segment is used to specify tax amounts for the previous TAX segment.	
SG16 - C 9	- **TRU-DTM** A group of segments to identify technical rules applicable for all products contained in the message and the rules' issue dates.	
TRU - M 1	- Technical rules This segment is used to specify any technical rules which relate to all of the products contained in the message.	
DTM - C 9	- Date/time/period This segment is used to specify the release date of the technical rules given in the previous TRU segment.	

Price/Sales Catalogue Detail Section

SG17 - C 1000	- **PGI-DTM-QTY-ALI-FTX-SG18-SG19-SG20-SG21-SG27-SG30-SG31-SG32-SG33-SG34-SG35-SG36** A group of segments enabling the standard commercial factors relevant to a specific group of items to be specified. e.g. quantity related price break factors or minimum order quantity.	
PGI - M 1	- Product group information This segment is used to group a set of related products together.	
DTM - C 15	- Date/time/period This segment is used to provide dates associated with the current product group.	
QTY - C 10	- Quantity This segment is used to specify quantity details (e.g. case quantity) relevant for the entire product group.	
ALI - C 5	- Additional information This segment is used to indicate any special conditions to which the group is subject.	
FTX - C 5	- Free text This segment is used to provide free text information related to the complete product group.	
SG18 - C 10	- **CUX-DTM** A group of segments specifying the currencies and related dates/periods valid for the whole pricing group.	
CUX - M 1	- Currencies This segment is used to specify currency information which applies to the entire group.	
DTM - C 5	- Date/time/period This segment is used to specify dates related to the previous CUX segment.	
SG19 - C 100	- **PRI-CUX-APR-RNG-DTM** A group of segments identifying the details of the price information for the product or service identified in the Price group.	
PRI - M 1	- Price details This segment is used to provide pricing information which is relevant to a complete product group.	

4. Segments Description

CUX - C 1 - Currencies

This segment is used to provide currency information for the whole product group.

APR - C 99 - Additional price information

This segment is used to provide a reason for a change in the price specified in the PRI segment.

RNG - C 1 - Range details

This segment is used to specify ranges related to prices provided in the PRI segment, e.g. price of 10000 EUR for quantities between 101 and 200 units, price of 19000 EUR for quantities between 201 and 300 units.

DTM - C 5 - Date/time/period

This segment is used to identify specific dates and times associated with pricing information.

SG20 - C 10 - **TAX-MOA**

A group of segments specifying tax related information, valid for the pricing group.

TAX - M 1 - Duty/tax/fee details

This segment is used to specify any taxes or duties which apply for the entire product group.

MOA - C 1 - Monetary amount

This segment is used to specify tax amounts for the previous TAX segment.

SG21 - C 99 - **ALC-ALI-SG22-SG23-SG24-SG25-SG26**

A group of segments specifying allowances and charges for the whole pricing group. The allowances or charges specified within this group relate to the total pricing group and has to be added to the allowances and charges at heading level, if any. When relevant, additional information, tax details may be indicated. The basis for the calculation of the allowance/ charge may be a quantity, a percentage, an amount or a rate.

ALC - M 1 - Allowance or charge

This segment is used to specify any allowances or charges related to the complete product group.

ALI - C 5 - Additional information

This segment is used to indicate any special conditions related to the allowances and/or charges specified in the ALC segment.

SG22 - C 1 - **QTY-RNG**

A group of segments specifying the quantity of the allowance or charge with its measure unit specifier. A range to which the allowance or charge applies may be specified. e.g. An allowance of a free quantity of 20 pieces may be specified if the quantity of goods ordered is greater than 1000 pieces.

QTY - M 1 - Quantity

This segment is used to specify quantity allowances/charges applicable for the entire product group.

RNG - C 1 - Range details

This segment is used to specify ranges which apply to the previous QTY segment.

SG23 - C 1 - **PCD-RNG**

A group of segments specifying the percentage for the allowance or charge, e.g. The allowance/charge amount is calculated as 5% of the goods value or a price reduction of 5% may be specified if the goods quantity ordered is within the range 5 tons to 10 tons.

PCD - M 1 - Percentage details

This segment is used to specify percentage allowances/charges applicable for the entire product group.

4. Segments Description

RNG - C 1 - Range details

This segment is used to specify ranges which apply to the previous PCD segment.

SG24 - C 2 - **MOA-RNG**

A group of segments specifying a monetary amount for an allowance or charge. A range to which the allowance or charge applies can be specified, e.g. an allowance of 5000 EUR may be specified if goods value ordered is greater than 100000 EUR.

MOA - M 1 - Monetary amount

This segment is used to specify monetary amount allowances/charges for the entire product group.

RNG - C 1 - Range details

This segment is used to specify ranges which apply to the previous MOA segment.

SG25 - C 1 - **RTE-RNG**

A group of segments specifying the rate per unit and basis to which the allowance or charge applies, e.g. The allowance/charge rate is 3 EUR per 10 tons.

RTE - M 1 - Rate details

This segment is used to specify rate allowances/charges applicable for the entire product group.

RNG - C 1 - Range details

This segment is used to specify ranges which apply to the previous RTE segment.

SG26 - C 5 - **TAX-MOA**

A group of segments of segments specifying tax related information for the allowance or charge.

TAX - M 1 - Duty/tax/fee details

This segment is used to specify any taxes or duties which are due on the allowances or charges which have been specified for the entire product group.

MOA - C 1 - Monetary amount

This segment is used to specify tax amounts for the previous TAX segment.

SG27 - C 20 - **NAD-LOC-SG28-SG29**

A group of segments identifying the parties with the associated information relevant for the pricing group.

NAD - M 1 - Name and address

This segment group is used to specify names and addresses relevant to the current pricing or product grouping.

LOC - C 5 - Place/location identification

This segment is used to specify the location details related to the identified party in the previous NAD.

SG28 - C 10 - **RFF-DTM**

A group of segments giving references only relevant to the specified party.

RFF - M 1 - Reference

This segment is used to indicate references related to the trading parties identified in the previous NAD segment.

DTM - C 5 - Date/time/period

This segment is used to specify dates relating to the references given in the preceding RFF segment.

SG29 - C 5 - **CTA-COM**

A group of segments giving contact details of the person or department within the party identified in the NAD segment.

4. Segments Description

CTA - M 1	- Contact information	
	This segment is used to identify the department or person within the party identified specified in the previous NAD segment.	
COM - C 5	- Communication contact	
	This segment is used to identify the communications number and the type of communications used for the contact identified in the previous CTA segment.	
SG30 - C 10	- **PAT-PCD**	
	A group of segments specifying the terms of payment applicable for the whole pricing group.	
PAT - M 1	- Payment terms basis	
	This segment is used to provide payment terms information related to the entire product group.	
PCD - C 1	- Percentage details	
	This segment is used to specify percentages related to the previous PAT segment.	
SG31 - C 10	- **TDT**	
	A group of segments identifying the mode and means of transport, relating to the whole pricing group.	
TDT - M 1	- Details of transport	
	This segment is used to specify transport details which are applicable to the entire product group.	
SG32 - C 5	- **TOD-LOC**	
	A group of segments indicating the terms of delivery for the whole pricing group.	
TOD - M 1	- Terms of delivery or transport	
	This segment is used to specify the terms of delivery for the current product group.	
LOC - C 2	- Place/location identification	
	This segment is used to provide the location applicable to de current terms of delivery.	
SG33 - C 10	- **PAC-MEA**	
	A group of segments specifying the packaging, physical dimensions for goods referenced by the price group.	
PAC - M 1	- Package	
	This segment is used to provide packaging information for the entire product group.	
MEA - C 10	- Measurements	
	This segment is used to provide measurement information related to the packaging details for the entire product group.	
SG34 - C 99	- **EFI-CED-COM-RFF-DTM-QTY**	
	A group of segments that refers through an external file identification to each of the external engineering/CAD files and giving additional information about each of the files.	
EFI - M 1	- External file link identification	
	This segment is used to identify an external object by indicating its identification, the format, and its sequence number on the physical medium.	
CED - C 99	- Computer environment details	
	This segment is used to give details of the physical medium used to generate the external object.	
COM - C 9	- Communication contact	
RFF - C 9	- Reference	
	This segment is used to identify any other EANCOM message to which the external object is linked.	

4. Segments Description

DTM	- C	9	- Date/time/period This segment is used to indicate the date/time on which the external object was generated.
QTY	- C	9	- Quantity This segment is used to identify the size/volume of the external object identified in the EFI segment.
SG35	- C	9	- **TRU-DTM** A group of segments to identify technical rules applicable for the current product group and the rules' issue dates.
TRU	- M	1	- Technical rules This segment is used to specify any technical rules which relate to the product group.
DTM	- C	9	- Date/time/period This segment is used to specify the release date of the technical rules given in the previous TRU segment.
SG36	- C	999999	- **LIN-PIA-IMD-MEA-QTY-HAN-ALI-DTM-RFF-LOC-FTX-SG37-SG38-SG40-SG41-SG47-SG48-SG51-SG52-SG54-SG55-SG56** A group of segments providing the relevant price/sales information for the specified product/service.
LIN	- M	1	- Line item This segment is used to identify the GTIN of a product.
PIA	- C	99	- Additional product id This segment is used to identify additional or substitutional item identification codes such as buyer's, or seller's item number.
IMD	- C	999	- Item description This segment is used to describe the current line item.
MEA	- C	10	- Measurements This segment is used to specify measurements related to the article identified in the LIN segment. Measurements related to the packaging of the article are provided in the MEA segment of the PAC segment group.
QTY	- C	10	- Quantity This segment is used to provide quantity information for the current line item, e.g. minimum order quantity.
HAN	- C	5	- Handling instructions This segment is used to specify any handling instructions for the current line item. Handling instructions related to the packaging of the product are provided in the HAN segment of the PAC segment group.
ALI	- C	5	- Additional information This segment is used to indicate special conditions for the current line item, or, to specify the country of origin of the line item.
DTM	- C	10	- Date/time/period This segment is used to specify relevant dates for the current line item.
RFF	- C	99	- Reference This segment is used to identify references, which are related to the current line item.

4. Segments Description

LOC - C 1	- Place/location identification This segment is used to indicate the country, the continent or the region where the product may be sold. This segment should only be used to identify countries other than the 'country of origin', e.g. country of export. The country of origin should continue to be stated in the ALI segment of the message.
FTX - C 999	- Free text This segment is used to provide any free text information related to the current line item.
SG37 - C 999	- **CCI-CAV-MEA** A group of segments providing product characteristic and -product characteristic details.
CCI - M 1	- Characteristic/class id This segment is used to specify the characteristics of the current line item.
CAV - C 10	- Characteristic value This segment is used to further specify product characteristics for the current line item.
MEA - C 10	- Measurements This segment is used to specify any measurements related to the currently identified product characteristic class.
SG38 - C 10	- **TAX-MOA** A group of segments specifying a tax type, category and rate relating to the item.
TAX - M 1	- Duty/tax/fee details This segment is used to specify the tax details for the current line item.
MOA - C 1	- Monetary amount This segment is used to indicate any monetary amounts related to the previous TAX segment.
SG40 - C 100	- **PRI-CUX-APR-RNG-DTM-LOC** A group of segments identifying the details of the price information for the product or service identified in the LIN segment group.
PRI - M 1	- Price details This segment is used to provide price information for the current line item.
CUX - C 1	- Currencies This segment is used to provide currency information for the current line item.
APR - C 99	- Additional price information This segment is used to provide a reason for a change in the price specified in the PRI segment.
RNG - C 1	- Range details This segment is used to provide price range details for the current line item.
DTM - C 5	- Date/time/period This segment is used to identify specific dates and times associated with pricing information.
LOC - C 99	- Place/location identification This segment is used to indicate the party to which the price applies. The party is identified with an GS1 Global Location Number (GLN). In addition, related locations such as target market, actual point of delivery, ... can be specified.

4. Segments Description

SG41 - C 99 - **ALC-ALI-DTM-SG42-SG43-SG44-SG45-SG46**

A group of segments specifying allowances and charges for the price item line and has to be added to the allowances and charges at pricing group level and / or heading level, if any. When relevant, additional information, tax details may be indicated. The basis for the calculation of the allowance/charge may be a quantity, a percentage, an amount or a rate.

ALC - M 1 - Allowance or charge

This segment is used to specify any allowances or charges which are applicable to the current line item.

ALI - C 5 - Additional information

This segment is used to specify special conditions related to the allowance and/or charge in the ALC segment.

DTM - C 9 - Date/time/period

This segment is used to indicate any dates related to the allowances/charges information specified in the ALC segment.

SG42 - C 10 - **QTY-RNG**

A group of segments specifying the quantity of the allowance or charge with its measure unit specifier. A range to which the allowance or charge applies may be specified. e.g. An allowance of a free quantity of 20 pieces may be specified if the quantity of goods ordered is greater than 1000 pieces.

QTY - M 1 - Quantity

This segment is used to specify quantity allowance/charge for the current line item.

RNG - C 1 - Range details

This segment is used to specify ranges which apply to the preceding QTY segment.

SG43 - C 99 - **PCD-RNG**

A group of segments specifying the percentage for the allowance or charge, e.g. The allowance/charge amount is calculated as 5% of the goods value or a price reduction of 5% may be specified if the goods quantity ordered is within the range 5 tons to 10 tons.

PCD - M 1 - Percentage details

This segment is used to specify percentage allowance/charges for the current line item.

RNG - C 1 - Range details

This segment is used to specify ranges which apply to the preceding PCD segment.

SG44 - C 10 - **MOA-RNG**

A group of segments specifying a monetary amount for an allowance or charge. A range to which the allowance or charge applies can be specified, e.g. an allowance of 5000 EUR may be specified if goods value ordered is greater than 100000 EUR.

MOA - M 1 - Monetary amount

This segment is used to specify monetary charges or discounts for the current line item.

RNG - C 1 - Range details

This segment is used to specify ranges which apply to the preceding MOA segment.

SG45 - C 10 - **RTE-RNG**

A group of segments specifying the rate per unit and basis to which the allowance or charge applies, e.g. the allowance/charge rate is 3 EUR per 10 tons.

RTE - M 1 - Rate details

This segment is used to specify rate charge/allowance information for the current line item.

4. Segments Description

RNG - C 1	- Range details This segment is used to specify ranges which apply to the preceding RTE segment.
SG46 - C 5	- **TAX-MOA** A group of segments of segments specifying tax related information for the allowance or charge.
TAX - M 1	- Duty/tax/fee details This segment is used to identify any taxes or duties which are due on the allowances or charges which have been specified for the current line item.
MOA - C 1	- Monetary amount This segment is used to specify in monetary terms the amount of tax due for the allowances and charges for the current line item.
SG47 - C 999	- **PAC-MEA-HAN** A group of segments identifying the packaging, physical dimensions, for the Price item line. If required, providing handling instructions and notification of hazardous materials.
PAC - M 1	- Package This segment is used to describe the packaging for the current line item.
MEA - C 10	- Measurements This segment provides measurement information related to the packaging of the current line item.
HAN - C 5	- Handling instructions This segment is used to specify the handling instructions related to the package identified in the PAC segment.
SG48 - C 10	- **PAT-DTM-PCD-MOA** A group of segments specifying the terms of payment applicable for the Price item line.
PAT - M 1	- Payment terms basis This segment is used by the supplier to specify any specific payment terms applicable the current product.
DTM - C 5	- Date/time/period This segment is used to specify any dates associated with the payment terms.
PCD - C 1	- Percentage details This segment is used to specify percentages related to the payment terms.
MOA - C 1	- Monetary amount This segment is used to specify monetary amounts related to the payment terms.
SG51 - C 99	- **EFI-CED-COM-RFF-DTM-QTY** A group of segments that refers through an external file identification to each of the external engineering/CAD files and giving additional information about each of the files.
EFI - M 1	- External file link identification This segment is used to identify an external object by indicating its identification, the format, and its sequence number on the physical medium.
CED - C 99	- Computer environment details This segment is used to give details of the physical medium used to generate the external object.
COM - C 9	- Communication contact

4. Segments Description

RFF - C 9 - Reference

This segment is used to identify any other EANCOM message to which the external object is linked.

DTM - C 9 - Date/time/period

This segment is used to indicate the date/time on which the external object was generated.

QTY - C 9 - Quantity

This segment is used to identify the size/volume of the external object identified in the EFI segment.

SG52 - C 99 - **NAD-SG53**

A group of segments identifying a party with associated information for the current product.

NAD - M 1 - Name and address

This segment is used to specify names and addresses relevant to the current product.

SG53 - C 99 - **CTA-COM**

A group of segments giving contact details of the person or department within the party identified in the NAD segment.

CTA - M 1 - Contact information

This segment is used to identify the department and person within the party identified in the previous NAD segment.

COM - C 99 - Communication contact

This segment is used to identify the communications number and the type of communications used for the contact identified in the previous CTA segment.

SG54 - C 9 - **TRU-DTM**

A group of segments to identify technical rules applicable for the actual product and the rules' issue dates.

TRU - M 1 - Technical rules

This segment is used to specify any technical rules which relate to the product group.

DTM - C 9 - Date/time/period

This segment is used to specify the release date of the technical rules given in the previous TRU segment.

SG55 - C 9 - **DGS-QTY-FTX**

A group of segments containing dangerous goods information relevant to the current product.

DGS - M 1 - Dangerous goods

This segment is used to indicate whether the current line item is dangerous or hazardous. The identification of any relevant regulations concerning dangerous goods is possible in this segment.

QTY - C 9 - Quantity

This segment is used to specify the quantities relevant to the dangerous goods information.

FTX - C 9 - Free text

This segment is used to specify any additional free text information required for the dangerous goods.

SG56 - C 999 - **HYN-PIA-QTY-SG58**

A group of segments to specify hierarchical connections from the given product to higher or lower levelled products.

4. Segments Description

HYN - M 1 - Hierarchy information

This segment is used to provide hierarchical product information related to the current line item.

PIA - C 99 - Additional product id

This segment is used to provide a promotional variant number which is part of the identification of a product.

QTY - C 9 - Quantity

This segment is used to specify quantity information related to the current hierarchical product.

SG58 - C 9 - **CCI-CAV-MEA**

A group of segments to identify characteristics depending on the product's use within the hierarchy specific to the identified party.

CCI - M 1 - Characteristic/class id

This segment is used to specify characteristics related to the currently identified hierarchy.

CAV - C 9 - Characteristic value

This segment is used to further specify characteristic for the current hierarchy.

MEA - C 99 - Measurements

This segment is used to specify any measurements related to the currently identified hierarchy characteristic class.

Price/Sales Catalogue Summary Section

UNT - M 1 - Message trailer

This segment is a mandatory UN/EDIFACT segment. It must always be the last segment in the message.

UNZ - M 1 - Interchange trailer

This segment is used to provide the trailer of an interchange.

5. Segments Layout

This section describes each segment used in the EANCOM® Price/sales catalogue message. The original EDIFACT segment layout is listed. The appropriate comments relevant to the EANCOM® subset are indicated.

Notes:

1. The segments are presented in the sequence in which they appear in the message. The segment or segment group tag is followed by the (M)andatory / (C)onditional indicator, the maximum number of occurrences and the segment description.

2. Reading from left to right, in column one, the data element tags and descriptions are shown, followed by in the second column the EDIFACT status (M or C), the field format, and the picture of the data elements. These first pieces of information constitute the original EDIFACT segment layout.

   Following the EDIFACT information, EANCOM® specific information is provided in the third, fourth, and fifth columns. In the third column a status indicator for the use of (C)onditional EDIFACT data elements (see 2.1 through 2.3 below), in the fourth column the restricted indicator (see point 3 on the following page), and in the fifth column notes and code values used for specific data elements in the message.

2.1 (M)andatory data elements in EDIFACT segments retain their status in EANCOM®.

2.2 Additionally, there are five types of status for data elements with a (C)onditional EDIFACT status, whether for simple, component or composite data elements. These are listed below and can be identified when relevant by the following abbreviations:

- REQUIRED	**R**	Indicates that the entity is required and must be sent.
- ADVISED	**A**	Indicates that the entity is advised or recommended.
- DEPENDENT	**D**	Indicates that the entity must be sent in certain conditions, as defined by the relevant explanatory note.
- OPTIONAL	**O**	Indicates that the entity is optional and may be sent at the discretion of the user.
- NOT USED	**N**	Indicates that the entity is not used and should be omitted.

2.3 If a composite is flagged as **N, NOT USED**, all data elements within that composite will have blank status indicators assigned to them.

3. Status indicators detailed in the fourth column which directly relate to the code values detailed in the fifth **column** may have two values:

- RESTRICTED	*****	A data element marked with an asterisk (*) in the fourth column indicates that the listed codes in column five are the only codes available for use with this data element, in this segment, in this message.
- OPEN		All data elements where coded representation of data is possible and a restricted set of code values is not indicated are open (no asterisk in fourth column). The available codes are listed in the EANCOM® Data Elements and Code Sets Directory. Code values may be given as examples or there may be a note on the format or type of code to be used.

4. Different colours are used for the code values in the segment details: restricted codes are in red and open codes in blue.

5. Segments Layout

Segment number: 1

UNA	- C	1 - Service string advice			
Function: To define the characters selected for use as delimiters and indicators in the rest of the interchange that follows.					
		EDIFACT	GS1	*	Description
UNA1	Component data element separator	M an1	**M**	*	Used as a separator between component data elements contained within a composite data element (default value: ":")
UNA2	Data element separator	M an1	**M**	*	Used to separate two simple or composite data elements (default value: "+")
UNA3	Decimal notation	M an1	**M**	*	Used to indicate the character used for decimal notation (default value:".")
UNA4	Release indicator	M an1	**M**	*	Used to restore any service character to its original specification (value: "?").
UNA5	Reserved for future use	M an1	**M**	*	(default value: space)
UNA6	Segment terminator	M an1	**M**	*	Used to indicate the end of segment data (default value: " ' ")

Segment Notes:

The service string advice shall begin with the upper case characters UNA immediately followed by six characters in the order shown below. The same character shall not be used in more than one position of the UNA.
This segment is used to inform the receiver of the interchange that a set of service string characters which are different to the default characters are being used.
When using the default set of service characters, the UNA segment need not be sent. If it is sent, it must immediately precede the UNB segment and contain the four service string characters (positions UNA1, UNA2, UNA4 and UNA6) selected by the interchange sender.
Regardless of whether or not all of the service string characters are being changed every data element within this segment must be filled, (i.e., if some default values are being used with user defined ones, both the default and user defined values must be specified).
When expressing the service string characters in the UNA segment, it is not necessary to include any element separators.
The use of the UNA segment is required when using a character set other than level A.
UNA:+.? '

5. Segments Layout

Segment number: 2

UNB - M 1 - Interchange header					
Function: To start, identify and specify an interchange.					
		EDIFACT	GS1	*	Description
S001	SYNTAX IDENTIFIER	M	**M**		See Part I chapter 5.2.7 and segment notes.
0001	Syntax identifier	M a4	**M**	*	UNOA = UN/ECE level A UNOB = UN/ECE level B UNOC = UN/ECE level C UNOD = UN/ECE level D UNOE = UN/ECE level E UNOF = UN/ECE level F
0002	Syntax version number	M n1	**M**	*	3 = Version 3
S002	INTERCHANGE SENDER	M	**M**		
0004	Sender identification	M an..35	**M**		GLN (n13)
0007	Partner identification code qualifier	C an..4	**R**	*	14 = GS1
0008	Address for reverse routing	C an..14	**O**		
S003	INTERCHANGE RECIPIENT	M	**M**		
0010	Recipient identification	M an..35	**M**		GLN (n13)
0007	Partner identification code qualifier	C an..4	**R**	*	14 = GS1
0014	Routing address	C an..14	**O**		
S004	DATE/TIME OF PREPARATION	M	**M**		
0017	Date of preparation	M n6	**M**		YYMMDD
0019	Time of preparation	M n4	**M**		HHMM
0020	Interchange control reference	M an..14	**M**		Unique reference identifying the interchange. Created by the interchange sender.
S005	RECIPIENT'S REFERENCE, PASSWORD	C	**O**		
0022	Recipient's reference/ password	M an..14	**M**		
0025	Recipient's reference/ password qualifier	C an2	**O**		
0026	Application reference	C an..14	**O**		Message identification if the interchange contains only one type of message.
0029	Processing priority code	C a1	**O**		A = Highest priority
0031	Acknowledgement request	C n1	**O**		1 = Requested
0032	Communications agreement ID	C an..35	**O**	*	EANCOM.....
0035	Test indicator	C n1	**O**		1 = Interchange is a test
Segment Notes: This segment is used to envelope the interchange, as well as to identify both, the party to whom the interchange is sent and the party who has sent the interchange. The principle of the UNB segment is the same as a physical envelope which covers one or more letters or documents, and which details, both the address where delivery is to take place and the address from where the envelope has come.					

5. Segments Layout

Segment number: 2

S001: The character encoding specified in basic code table of ISO/IEC 646 (7-bit coded character set for information interchange) shall be used for the interchange service string advice (if used) and up to and including the composite data element S001 'Syntax identifier' in the interchange header. The character repertoire used for the characters in an interchange shall be identified from the code value of data element 0001 in S001 'Syntax identifier' in the interchange header. The character repertoire identified does not apply to objects and/or encrypted data.
The default encoding technique for a particular repertoire shall be the encoding technique defined by its associated character set specification.
DE 0001: The recommended (default) character set for use in EANCOM® for international exchanges is character set A (UNOA). Should users wish to use character sets other than A, an agreement on which set to use should be reached on a bilateral basis before communications begin.
DE 0004, 0008, 0010, 0014, 0042 and 0046: Within EANCOM® the use of the Global Location Number (GLN) is recommended for the identification of the interchange sender and recipient.
DE 0008: Identification (e.g. a division) specified by the sender of the interchange, to be included if agreed, by the recipient in response interchanges, to facilitate internal routing.
DE 0042: Sub-level of sender internal identification, when further sub-level identification is required.
DE 0014: The address for routing, provided beforehand by the interchange recipient, is used by the interchange sender to inform the recipient of the internal address, within the latter's systems, to which the interchange should be routed. It is recommended that the GLN be used for this purpose.
DE 0007: Identification (e.g. a division) specified by the recipient of the interchange, to be included if agreed, by the sender in response interchanges, to facilitate internal routing.
DE 0046: Sub-level of recipient internal identification, when further sub-level identification is required.
DE S004: The date and time specified in this composite should be the date and time at which the interchange sender prepared the interchange. This date and time may not necessarily be the same as the date and time of contained messages.
DE 0020: The interchange control reference number is generated by the interchange sender and is used to identify uniquely each interchange. Should the interchange sender wish to re-use interchange control reference numbers, it is recommended that each number be preserved for at least a period of three months before being re-used. In order to guarantee uniqueness, the interchange control reference number should always be linked to the interchange sender's identification (DE 0004).
DE S005: The use of passwords must first be agreed bilaterally by the parties exchanging the interchange.
DE 0026: This data element is used to identify the application, on the interchange recipient's system, to which the interchange is directed. This data element may only be used if the interchange contains only one type of message, (e.g. only invoices). The reference used in this data element is assigned by the interchange sender.
DE 0031: This data element is used to indicate whether an acknowledgement to the interchange is required. The EANCOM® APERAK or CONTRL message should be used to provide acknowledgement of interchange receipt. In addition, the EANCOM® CONTRL message may be used to indicate when an interchange has been rejected due to syntax errors.
DE 0032: This data element is used to identify any underlying agreements which control the exchange of data. Within EANCOM® , the identity of such agreements must start with the letters 'EANCOM', the remaining characters within the data element being filled according to bilateral agreements.

UNB+UNOA:3+5412345678908:14+8798765432106:14+020102:1000+12345555+++++EANCOMREF 52'

5. Segments Layout

Segment number: 3

UNH	- M	1 - Message header			
Function: To head, identify and specify a message.					
		EDIFACT	GS1	*	Description
0062	Message reference number	M an..14	**M**		Senders unique message reference. Sequence number of messages in the interchange. DE 0062 in UNT will have the same value. Generated by the sender.
S009	MESSAGE IDENTIFIER	M	**M**		
0065	Message type	M an..6	**M**	*	PRICAT = Price/sales catalogue message
0052	Message version number	M an..3	**M**	*	D = Draft version/UN/EDIFACT Directory
0054	Message release number	M an..3	**M**	*	01B = Release 2001 - B
0051	Controlling agency	M an..2	**M**	*	UN = UN/CEFACT
0057	Association assigned code	C an..6	**R**	*	EAN009 = GS1 version control number (GS1 Permanent Code) Indicates that the message is an EANCOM version 009 of the UNSM Price/Sales Catalogue. GDSN23 = GDSN version 2.3 (GS1 Permanent Code)
0068	Common access reference	C an..35	**N**		
S010	STATUS OF THE TRANSFER	C	**N**		
0070	Sequence of transfers	M n..2			
0073	First and last transfer	C a1			
Segment Notes: This segment is used to head, identify and specify a message. DE's 0065, 0052, 0054, and 0051: Indicate that the message is a UNSM Price/Sales Catalogue based on the D. 01B directory under the control of the United Nations. Example: UNH+ME000001+PRICAT:D:01B:UN:EAN009'					

5. Segments Layout

Segment number: 4

BGM	- M	1 - Beginning of message			
Function: To indicate the type and function of a message and to transmit the identifying number.					
		EDIFACT	GS1	*	Description
C002	DOCUMENT/MESSAGE NAME	C	**R**		
1001	Document name code	C an..3	**R**	*	2E = Data distribution profile (GS1 Temporary Code) 9 = Price/sales catalogue 51 = Price/sales catalogue response 727 = Price/sales catalogue not containing commercial information 728 = Price/sales catalogue containing commercial information It is of critical importance to use the appropriate document name qualifier relevant to the message. Codes 727 and 728 are to be used to explicitly indicate whether a catalogue contains only pricing information (e.g. PRI, ALC, TAX, etc.) or only technical information (e.g. IMD, MEA, HAN, etc.) and to allow application routing to take place depending on the value expressed here.
1131	Code list identification code	C an..17	**N**		
3055	Code list responsible agency code	C an..3	**D**	*	9 = GS1 This data element is used with code value 9 when GS1 codes are used in DE 1001.
1000	Document name	C an..35	**O**		
C106	DOCUMENT/MESSAGE IDENTIFICATION	C	**R**		
1004	Document identifier	C an..35	**R**		Price/sales catalogue message number. For global unique identification of documents Global Document Type Identifier (GDTI) is available.
1056	Version identifier	C an..9	**N**		
1060	Revision identifier	C an..6	**N**		
1225	Message function code	C an..3	**R**	*	2 = Addition 3 = Deletion 4 = Change 5 = Replace 6 = Confirmation 7 = Duplicate 9 = Original 11 = Response 27 = Not accepted 29 = Accepted without amendment 31 = Copy 46 = Provisional 47 = Definitive The message function, coded is a critical data element in this segment. It applies to all data indicated in the message. The following definitions apply for the restricted codes: 2 = Addition - This code is used to add new or to provide information on existing products for the first time to the trading partner.

5. Segments Layout

Segment number: 4

	EDIFACT	GS1	*	Description
				3 = Deletion - This code is used to delete products from a partner's master file. In the case of deletion each LIN segment to be deleted must be sent in the detail section. 4 = Change - This code is used to modify any information relevant to a product already known by the trading partner. Only the segments containing modified information needs to be sent. All previously sent data in a modified segment must be provided. All occurrences (repetitions) of a modified segment must be provided (whether modified or not). 5 = Replace - To replace a previously sent message identified in the RFF segment of the heading section. 6 = Confirmation - This code is used when product information contained in a previous transmission is sent again for confirmation purposes. 7 = Duplicate - This code is used when the message is a duplicate of a previously generated message. 9 = Original - An original transmission of a Price/sales catalogue. 27 = Not accepted - This code is used in a PRICAT response to inform the recipient that the referenced PRICAT message was not accepted. 29 = Accepted without amendment - This code is used in a PRICAT response to inform the recipient that the referenced PRICAT message was accepted completely. 31 = Copy - This code indicates that the message is a copy of an original message that has been sent, e.g. for action or information. 46 = Provisional - This code is used to indicate that the content of the price/sales catalogue message is provisional and is subject to final approval (using code 47). 47 = Definitive - This code is used to indicate that the content of the price/sales catalogue message is definitive. When code value '46, Provisional' is used, it is recommended that a subsequent message using code value '47, Definitive' should follow.
4343 Response type code	C an..3	**D**		AC = Acknowledge - with detail and change AI = Acknowledge only changes This data element is used when the message sender needs an acknowledgement of the message.

Segment Notes:

This segment is used to indicate the type and function of a message and to transmit the identifying number.
All references other than the document number DE 1004 are in the RFF segment.

Example:
BGM+9+PC32458+2'

5. Segments Layout

Segment number: 5

DTM - M 35 - Date/time/period					
Function: To specify date, and/or time, or period.					
		EDIFACT	GS1	*	Description
C507	DATE/TIME/PERIOD	M	**M**		
2005	Date or time or period function code qualifier	M an..3	**M**		7 = Effective date/time 137 = Document/message date/time 157 = Validity start date 194 = Start date/time 206 = End date/time 263 = Invoicing period 266 = Validation date 273 = Validity period 261 = Release date/time 362 = End availability date 799 = Validity end date Code value '266' is used in a Price/Sales Catalogue Response to indicate the date on which the Price/ Sales Catalogue being responded to was validated.
2380	Date or time or period value	C an..35	**R**		
2379	Date or time or period format code	C an..3	**R**		102 = CCYYMMDD 203 = CCYYMMDDHHMM 718 = CCYYMMDD-CCYYMMDD

Segment Notes:

This segment is used to specify the date or period of the Price/Sales Catalogue.
DE 2005: Identification of the 'Document/message date/time' (code value 137) is mandatory in an EANCOM message.

Example:
DTM+137:20020301:102'
Document date is the 1st March 2002.

DTM+273:2002011220020331:718'
The validity period of the price catalogue is from the 12th of January 2002 to the 31st of March 2002.

5. Segments Layout

Segment number: 6

FTX - C 99 - Free text

Function:

To provide free form or coded text information.

		EDIFACT	GS1	*	Description
4451	Text subject code qualifier	M an..3	**M**		GEN = Entire transaction set ZZZ = Mutually defined
4453	Free text function code	C an..3	**R**	*	1 = Text for subsequent use
C107	TEXT REFERENCE	C	**D**		This composite is only used when trading partners have agreed to use mutually defined code values.
4441	Free text value code	M an..17	**M**		001 = Standard text between trading partners
1131	Code list identification code	C an..17	**O**		
3055	Code list responsible agency code	C an..3	**D**		91 = Assigned by supplier or supplier's agent 92 = Assigned by buyer or buyer's agent
C108	TEXT LITERAL	C	**D**		This composite is only used if coded text can not be used.
4440	Free text value	M an..512	**M**		
4440	Free text value	C an..512	**O**		
4440	Free text value	C an..512	**O**		
4440	Free text value	C an..512	**O**		
4440	Free text value	C an..512	**O**		
3453	Language name code	C an..3	**D**		ISO 639 two alpha code This data element is only used when non coded free text has been provided in data element C108.
4447	Free text format code	C an..3	**N**		

Segment Notes:

This segment is used to provide any free text information related to the complete Price/Sales Catalogue message.
Use of this segment in free form is not recommended since it inhibits automatic processing of the Price/Sales Catalogue. Coded references to standard texts is an available functionality which enables automatic processing and reduces transmission overheads. Standard texts should be mutually defined among trading partners and can be used to cover legal and other requirements.

Example:
FTX+ZZZ+1+001::91'
(e.g., standard text code 001 = Special prices effective first of month)

5. Segments Layout

Segment number: 7

SG1	- C	99	-	RFF-DTM
RFF	- M	1	-	Reference

Function:

To specify a reference.

		EDIFACT	GS1	*	Description
C506	REFERENCE	M	**M**		
1153	Reference code qualifier	M an..3	**M**		CR = Customer reference number CT = Contract number PL = Price list number
1154	Reference identifier	C an..70	**R**		
1156	Document line identifier	C an..6	**N**		
4000	Reference version identifier	C an..35	**N**		
1060	Revision identifier	C an..6	**N**		

Segment Notes:

This segment is used to give references which apply to the complete message.

Example:
RFF+PL:34234'
RFF+CR:5622ABE'

5. Segments Layout

Segment number: 8

SG1	- C	99	-	RFF-DTM
DTM	- C	5	-	Date/time/period

Function:

To specify date, and/or time, or period.

		EDIFACT	GS1	*	Description
C507	DATE/TIME/PERIOD	M	**M**		
2005	Date or time or period function code qualifier	M an..3	**M**	*	171 = Reference date/time
2380	Date or time or period value	C an..35	**R**		
2379	Date or time or period format code	C an..3	**R**		102 = CCYYMMDD 203 = CCYYMMDDHHMM

Segment Notes:

This segment is used to specify dates relating to the references given in the preceding RFF segment.

Example:
DTM+171:20020810:102'

5. Segments Layout

Segment number: 9

SG2	- C	99 -	NAD-SG3-SG4
NAD	- M	1 -	Name and address

Function:

To specify the name/address and their related function, either by C082 only and/or unstructured by C058 or structured by C080 thru 3207.

		EDIFACT	GS1	*	Description
3035	Party function code qualifier	M an..3	**M**		BY = Buyer DER = Source data pool DGE = Breeder GX = Central catalogue party LF = Buyer's corporate office LG = Supplier's corporate office SN = Store number SR = Supplier's agent/representative SU = Supplier
C082	PARTY IDENTIFICATION DETAILS	C	**A**		
3039	Party identifier	M an..35	**M**		For identification of parties it is recommended to use GLN - Format n13.
1131	Code list identification code	C an..17	**N**		
3055	Code list responsible agency code	C an..3	**R**	*	9 = GS1
C058	NAME AND ADDRESS	C	**O**		This composite may only be used to fulfill the requirements of directive 2003/58/EC, article 4.
3124	Name and address description	M an..35	**M**		
3124	Name and address description	C an..35	**O**		
3124	Name and address description	C an..35	**O**		
3124	Name and address description	C an..35	**O**		
3124	Name and address description	C an..35	**O**		
C080	PARTY NAME	C	**D**		
3036	Party name	M an..35	**M**		Party Name in clear text.
3036	Party name	C an..35	**O**		
3036	Party name	C an..35	**O**		
3036	Party name	C an..35	**O**		
3036	Party name	C an..35	**O**		
3045	Party name format code	C an..3	**O**		
C059	STREET	C	**D**		
3042	Street and number or post office box identifier	M an..35	**M**		Building Name/Number and Street
3042	Street and number or post office box identifier	C an..35	**O**		Name and/or P.O. Box
3042	Street and number or post office box identifier	C an..35	**O**		
3042	Street and number or post office box identifier	C an..35	**O**		
3164	City name	C an..35	**D**		City/Town name, clear text.

5. Segments Layout

Segment number: 9

		EDIFACT	GS1	*	Description
C819	COUNTRY SUB-ENTITY DETAILS	C	**D**		
3229	Country sub-entity name code	C an..9	**O**		
1131	Code list identification code	C an..17	**O**		
3055	Code list responsible agency code	C an..3	**O**		
3228	Country sub-entity name	C an..70	**O**		County/State, clear text.
3251	Postal identification code	C an..17	**D**		Postal Code
3207	Country name code	C an..3	**D**		ISO 3166 2 alpha code

Segment Notes:

This segment is used to identify the trading partners involved in the Price/Sales Catalogue process. Identification of the buyer and supplier, or the central catalogue/data base, of goods or services is recommended in the Price/ Sales Catalogue message.

Example:
NAD+BY+5412345000020::9'
Buyer's location number 5412345000020.

NAD+SU+4012345500004::9'
Supplier's location number 4012345500004.

Dependency Notes:
The following composites and data elements are only used when a coded name and address can not be used or there is a requirement to furnish the full name and address of the party identified. The affected composites and data elements are as follows:
C080 - C059 - 3164 - C819 - 3251 - 3207

5. Segments Layout

Segment number: 10

SG2	- C	99	-	NAD-SG3-SG4
SG3	- C	10	-	RFF
RFF	- M	1	-	Reference

Function:

To specify a reference.

		EDIFACT	GS1	*	Description
C506	REFERENCE	M	**M**		
1153	Reference code qualifier	M an..3	**M**	*	AID = Certificate of conformity GN = Government reference number VA = VAT registration number XA = Company/place registration number YC1 = Additional party identification (GS1 Temporary Code)
1154	Reference identifier	C an..70	**R**		
1156	Document line identifier	C an..6	**N**		
4000	Reference version identifier	C an..35	**O**		
1060	Revision identifier	C an..6	**N**		

Segment Notes:

This segment is used to indicate references related to the trading parties identified in the previous NAD segment.

Example:
RFF+YC1:VR12345'

5. Segments Layout

Segment number: 11

SG2	- C	99 -	NAD-SG3-SG4
SG4	- C	5 -	CTA-COM
CTA	- M	1 -	Contact information

Function:

To identify a person or a department to whom communication should be directed.

		EDIFACT	GS1	*	Description
3139	Contact function code	C an..3	**R**		OC = Order contact SA = Sales administration
C056	DEPARTMENT OR EMPLOYEE DETAILS	C	**O**		
3413	Department or employee name code	C an..17	**O**		
3412	Department or employee name	C an..35	**O**		

Segment Notes:

This segment is used to identify the department and person within the party identified in the previous NAD segment.
The Global Location Number GLN - Format n13 in this segment is particularly suitable for this purpose.

Example:
CTA+OC+:MARK CARTER'
Mr. Mark Carter is the person to contact for purchase orders.

5. Segments Layout

Segment number: 12

SG2	- C	99	-	NAD-SG3-SG4
SG4	- C	5	-	CTA-COM
COM	- C	5	-	Communication contact

Function:

To identify a communication number of a department or a person to whom communication should be directed.

		EDIFACT	GS1	*	Description
C076	COMMUNICATION CONTACT	M	**M**		
3148	Communication address identifier	M an..512	**M**		
3155	Communication address code qualifier	M an..3	**M**		AO = Uniform Resource Location (URL) EI = EDI EM = Electronic mail TE = Telephone

Segment Notes:

This segment is used to identify the communications number and the type of communications used for the contact identified in the previous CTA segment.

Example:
COM+00448136533223:TE'

5. Segments Layout

Segment number: 13

SG5	- C	5 - TAX
TAX	- M	1 - Duty/tax/fee details

Function:

To specify relevant duty/tax/fee information.

		EDIFACT	GS1	*	Description
5283	Duty or tax or fee function code qualifier	M an..3	**M**		5 = Customs duty 7 = Tax
C241	DUTY/TAX/FEE TYPE	C	**D**		
5153	Duty or tax or fee type name code	C an..3	**O**		ENV = Environmental tax GST = Goods and services tax VAT = Value added tax
1131	Code list identification code	C an..17	**O**		
3055	Code list responsible agency code	C an..3	**D**		
5152	Duty or tax or fee type name	C an..35	**O**		
C533	DUTY/TAX/FEE ACCOUNT DETAIL	C	**O**		
5289	Duty or tax or fee account code	M an..6	**M**		
1131	Code list identification code	C an..17	**O**		
3055	Code list responsible agency code	C an..3	**D**		
5286	Duty or tax or fee assessment basis value	C an..15	**O**		
C243	DUTY/TAX/FEE DETAIL	C	**O**		
5279	Duty or tax or fee rate code	C an..7	**O**		
1131	Code list identification code	C an..17	**O**		
3055	Code list responsible agency code	C an..3	**D**		
5278	Duty or tax or fee rate	C an..17	**R**		
5273	Duty or tax or fee rate basis code	C an..12	**O**		
1131	Code list identification code	C an..17	**O**		
3055	Code list responsible agency code	C an..3	**D**		
5305	Duty or tax or fee category code	C an..3	**D**		A = Mixed tax rate E = Exempt from tax S = Standard rate Tax types and categories will vary from country to country. They should be defined by national guidelines.
3446	Party tax identifier	C an..20	**O**		
1227	Calculation sequence code	C an..3	**N**		

Segment Notes:

This segment is to be used to provide tax information applicable to the whole Price/Sales Catalogue.

Example:

5. Segments Layout

Segment number: 13

```
TAX+7+VAT+++:::21+S'
```

5. Segments Layout

Segment number: 14

SG6	- C	20 -	CUX-DTM
CUX	- M	1 -	Currencies

Function:

To specify currencies used in the transaction and relevant details for the rate of exchange.

		EDIFACT	GS1	*	Description
C504	CURRENCY DETAILS	C	**R**		
6347	Currency usage code qualifier	M an..3	**M**	*	2 = Reference currency
6345	Currency identification code	C an..3	**R**		ISO 4217 three Alpha
6343	Currency type code qualifier	C an..3	**R**	*	8 = Price list currency 11 = Payment currency
6348	Currency rate value	C n..4	**N**		
C504	CURRENCY DETAILS	C	**D**		The second occurrence of this composite is only used if a target currency is being specified.
6347	Currency usage code qualifier	M an..3	**M**	*	3 = Target currency
6345	Currency identification code	C an..3	**R**		ISO 4217 three alpha.
6343	Currency type code qualifier	C an..3	**R**	*	8 = Price list currency 11 = Payment currency
6348	Currency rate value	C n..4	**O**		
5402	Currency exchange rate	C n..12	**D**		The rate of exchange which applies between the reference and target currency. The rate of exchange is only used if a target currency has been identified in the second occurrence of C504.
6341	Exchange rate currency market identifier	C an..3	**N**		

Segment Notes:

This segment is used to specify the currencies in which the prices in the Price/Sales Catalogue are quoted and to specify the currencies for international trading.
The CUX segment is mandatory for international exchanges.
This segment is used to specify the currencies in which the prices in the Price/Sales Catalogue are quoted.
When specifying Reference and Target Currencies, one occurrence of CUX is all that is required. The reference currency is identified in the first occurrence of the composite C504, with the target currency specified in the second occurrence of C504. The rate of exchange between the two is detailed in DE 5402.
The general rule for calculating rate of exchange is as follows:
Reference Currency multiplied by Rate = Target Currency.

Example:
1. Where only the price list currency needs to be identified for national trade.
CUX+2:EUR:8'

CUX+2:EUR:8+3:USD:11+0.90243'

5. Segments Layout

Segment number: 15

SG6	- C	20	-	CUX-DTM
DTM	- C	5	-	Date/time/period

Function:

To specify date, and/or time, or period.

		EDIFACT	GS1	*	Description
C507	DATE/TIME/PERIOD	M	**M**		
2005	Date or time or period function code qualifier	M an..3	**M**	*	134 = Rate of exchange date/time 194 = Start date/time 206 = End date/time
2380	Date or time or period value	C an..35	**R**		
2379	Date or time or period format code	C an..3	**R**		102 = CCYYMMDD 203 = CCYYMMDDHHMM 718 = CCYYMMDD-CCYYMMDD

Segment Notes:

This segment is used to specify dates related to the previous CUX segment.

Example:
DTM+134:20020701:102'

5. Segments Layout

Segment number: 16

SG7	- C	10 -	PAT-PCD
PAT	- M	1 -	Payment terms basis

Function:

To specify the payment terms basis.

Notes:
1. This segment will be removed effective with directory D.02B.

		EDIFACT	GS1	*	Description
4279	Payment terms type code qualifier	M an..3	**M**		1 = Basic 3 = Fixed date 7 = Extended 20 = Penalty terms 22 = Discount
C110	PAYMENT TERMS	C	**N**		
4277	Payment terms description identifier	M an..17			
1131	Code list identification code	C an..17			
3055	Code list responsible agency code	C an..3			
4276	Payment terms description	C an..35			
4276	Payment terms description	C an..35			
C112	TERMS/TIME INFORMATION	C	**O**		
2475	Time reference code	M an..3	**M**		5 = Date of invoice
2009	Terms time relation code	C an..3	**O**		3 = After reference
2151	Period type code	C an..3	**O**		D = Day M = Month WD = Working days Y = Year
2152	Period count quantity	C n..3	**O**		

Segment Notes:

This segment is used to provide payment terms to be specified which are applicable to all products contained in the message.

Example:
PAT+1++5:3:D:30'

5. Segments Layout

Segment number: 17

SG7	- C	10 -	PAT-PCD
PCD	- C	1 -	Percentage details

Function:

To specify percentage information.

		EDIFACT	GS1	*	Description
C501	PERCENTAGE DETAILS	M	**M**		
5245	Percentage type code qualifier	M an..3	**M**		7 = Percentage of invoice 12 = Discount 15 = Penalty percentage 16 = Interest percentage
5482	Percentage	C n..10	**R**		Actual percentage which must be paid.
5249	Percentage basis identification code	C an..3	**O**		
1131	Code list identification code	C an..17	**O**		
3055	Code list responsible agency code	C an..3	**D**		
4405	Status description code	C an..3	**N**		

Segment Notes:

This segment is used to specify percentages related to the payment terms.

Example:
PCD+7:100'
100 % of the invoice must be paid

5. Segments Layout

Segment number: 18

SG8	- C	10 -	TDT
TDT	- M	1 -	Details of transport

Function:

To specify the transport details such as mode of transport, means of transport, its conveyance reference number and the identification of the means of transport.

		EDIFACT	GS1	*	Description
8051	Transport stage code qualifier	M an..3	**M**		20 = Main-carriage transport
8028	Means of transport journey identifier	C an..17	**O**		Reference number covering the transport.
C220	MODE OF TRANSPORT	C	**A**		
8067	Transport mode name code	C an..3	**R**		
8066	Transport mode name	C an..17	**N**		
C228	TRANSPORT MEANS	C	**O**		
8179	Transport means description code	C an..8	**D**		23 = Rail bulk car 31 = Truck
8178	Transport means description	C an..17	**D**		
C040	CARRIER	C	**O**		
3127	Carrier identifier	C an..17	**A**		Global Location Number GLN - Format n13
1131	Code list identification code	C an..17	**O**		
3055	Code list responsible agency code	C an..3	**D**		9 = GS1
3128	Carrier name	C an..35	**O**		
8101	Transit direction indicator code	C an..3	**N**		
C401	EXCESS TRANSPORTATION INFORMATION	C	**N**		
8457	Excess transportation reason code	M an..3			
8459	Excess transportation responsibility code	M an..3			
7130	Customer shipment authorisation identifier	C an..17			
C222	TRANSPORT IDENTIFICATION	C	**N**		
8213	Transport means identification name identifier	C an..9			
1131	Code list identification code	C an..17			
3055	Code list responsible agency code	C an..3			
8212	Transport means identification name	C an..35			
8453	Transport means nationality code	C an..3			
8281	Transport means ownership indicator code	C an..3	**N**		

Segment Notes:

5. Segments Layout

Segment number: 18

This segment is used to specify transport details which are applicable to all products contained in the message.

Example:
TDT+20++30+31'

Dependency Notes:
Data Elements 8179 and 8178 are only used when the type of transport must be specifically identified, that is, when a generic description such as road transport is unsuitable.

5. Segments Layout

Segment number: 19

SG9	- C	5 -	TOD-LOC
TOD	- M	1 -	Terms of delivery or transport

Function:

To specify terms of delivery or transport.

		EDIFACT	GS1	*	Description
4055	Delivery or transport terms function code	C an..3	**R**		3 = Price and despatch condition 6 = Delivery condition
4215	Transport charges payment method code	C an..3	**O**		DF = Defined by buyer and supplier PC = Prepaid but charged to customer PP = Prepaid (by seller) PU = Pickup
C100	TERMS OF DELIVERY OR TRANSPORT	C	**R**		
4053	Delivery or transport terms description code	C an..3	**R**		INCOTERMS (See EANCOM Codes Set) If INCOTERMS are applicable, then DE 3055 has to contain code value "9" and DE 1131 must be used.
1131	Code list identification code	C an..17	**D**		
3055	Code list responsible agency code	C an..3	**D**		
4052	Delivery or transport terms description	C an..70	**O**		
4052	Delivery or transport terms description	C an..70	**O**		

Segment Notes:

This segment is used to specify the terms of delivery for the complete Price/Sales Catalogue. When specifying terms of delivery it is recommended in EANCOM to use Incoterms.

Example:
TOD+3++CIF:2E:9'

Dependency Notes:
Data elements 1131 and 3055 are only used if specific terms of delivery codes, which are outside those recommended by EDIFACT, are being used.

5. Segments Layout

Segment number: 20

SG9	- C	5 -	TOD-LOC
LOC	- C	2 -	Place/location identification

Function:

To identify a place or a location and/or related locations.

		EDIFACT	GS1	*	Description
3227	Location function code qualifier	M an..3	**M**		1 = Place of terms of delivery
C517	LOCATION IDENTIFICATION	C	**A**		
3225	Location name code	C an..25	**A**		UN/LOCODES For identification of locations related to the terms of delivery it is recommended to use UN/LOCODES.
1131	Code list identification code	C an..17	**O**		
3055	Code list responsible agency code	C an..3	**D**		3 = IATA (International Air Transport Association) DE 3055 must be used if DE 3225 is used and does not contain an UN/LOCODE.
3224	Location name	C an..256	**O**		
C519	RELATED LOCATION ONE IDENTIFICATION	C	**N**		
3223	First related location name code	C an..25			
1131	Code list identification code	C an..17			
3055	Code list responsible agency code	C an..3			
3222	First related location name	C an..70			
C553	RELATED LOCATION TWO IDENTIFICATION	C	**N**		
3233	Second related location name code	C an..25			
1131	Code list identification code	C an..17			
3055	Code list responsible agency code	C an..3			
3232	Second related location name	C an..70			
5479	Relation code	C an..3	**N**		

Segment Notes:

This segment is used to provide location applicable to the terms of delivery.

Example:
LOC+1+BE-BRU'

5. Segments Layout

Segment number: 21

SG10	- C	10 -	ALC-ALI-DTM-SG11-SG12-SG13-SG14-SG15
ALC	- M	1 -	Allowance or charge

Function:
To identify allowance or charge details.

		EDIFACT	GS1	*	Description
5463	Allowance or charge code qualifier	M an..3	**M**		A = Allowance C = Charge
C552	ALLOWANCE/CHARGE INFORMATION	C	**O**		
1230	Allowance or charge identifier	C an..35	**D**		If code '69' is used in DE 5189, the agreement number must be specified in DE 1230.
5189	Allowance or charge identification code	C an..3	**O**		1 = Handling commission 69 = Charge for a customer specific finish 102 = Fixed long term 103 = Temporary 104 = Standard
4471	Settlement means code	C an..3	**O**		5 = Charge to be paid by vendor 6 = Charge to be paid by customer
1227	Calculation sequence code	C an..3	**D**		1 = First step of calculation 2 = Second step of calculation etc, etc, etc.. 9 = Ninth step of calculation The calculation sequence indicator is used when multiple allowances and/or charges are applicable. If various allowances and/or charges percentages, quantities, monetary amounts or rates are applicable to the same base price, then the calculation sequence indicator will always equal one. If the various allowances and/or charges are applied against a fluctuating price (constantly because of the application of other allowances and/or charges) then the sequence of calculation is indicated using this data element. If the allowance or charge is not to be applied against a fixed price then the calculation sequence indicator must be included.
C214	SPECIAL SERVICES IDENTIFICATION	C	**D**		This composite is only used if the supplier knows the type of allowance or charge.
7161	Special service description code	C an..3	**R**		DDA = Dealer discount/allowance (GS1 Temporary Code) TD = Trade discount
1131	Code list identification code	C an..17	**O**		
3055	Code list responsible agency code	C an..3	**D**	*	9 = GS1 This data element is only used if an GS1 code value is used in data element 7161.
7160	Special service description	C an..35	**O**		
7160	Special service description	C an..35	**O**		

Segment Notes:
This segment is used to specify any allowances or charges related to the complete Price /Sales Catalogue.

Example:

5. Segments Layout

Segment number: 21

ALC+A+++1'

5. Segments Layout

Segment number: 22

SG10	- C	10 -	ALC-ALI-DTM-SG11-SG12-SG13-SG14-SG15
ALI	- C	5 -	Additional information

Function:

To indicate that special conditions due to the origin, customs preference, fiscal or commercial factors are applicable.

		EDIFACT	GS1	*	Description
3239	Country of origin name code	C an..3	**O**		Use ISO 3166 two alpha
9213	Duty regime type code	C an..3	**O**		
4183	Special condition code	C an..3	**O**		6 = Subject to bonus 8 = Subject to discount
4183	Special condition code	C an..3	**O**		
4183	Special condition code	C an..3	**O**		
4183	Special condition code	C an..3	**O**		
4183	Special condition code	C an..3	**O**		

Segment Notes:

This segment is used to indicate any special conditions related to the allowances and/or charges specified in the ALC segment.

Example:
ALI+++8'

5. Segments Layout

Segment number: 23

SG10	- C	10 -	ALC-ALI-DTM-SG11-SG12-SG13-SG14-SG15
DTM	- C	9 -	Date/time/period

Function:

To specify date, and/or time, or period.

		EDIFACT	GS1	*	Description
C507	DATE/TIME/PERIOD	M	**M**		
2005	Date or time or period function code qualifier	M an..3	**M**		194 = Start date/time 206 = End date/time
2380	Date or time or period value	C an..35	**R**		
2379	Date or time or period format code	C an..3	**R**		102 = CCYYMMDD 203 = CCYYMMDDHHMM

Segment Notes:

This segment is used to indicate any dates related to the allowances or/charges information specified in the ALC segment.

Example:
DTM+194:20021101:102'
DTM+206:20021115:102'
This example indicates that the allowances and/or charges start on the 1st of November 2002 and finish on the 15th of November 2002.

5. Segments Layout

Segment number: 24

SG10	- C	10 -	ALC-ALI-DTM-SG11-SG12-SG13-SG14-SG15
SG11	- C	10 -	QTY-RNG
QTY	- M	1 -	Quantity

Function:

To specify a pertinent quantity.

		EDIFACT	GS1	*	Description
C186	QUANTITY DETAILS	M	**M**		
6063	Quantity type code qualifier	M an..3	**M**		1 = Discrete quantity
6060	Quantity	M an..35	**M**		
6411	Measurement unit code	C an..3	**D**		This data element is only used if the current product is of variable quantity.

Segment Notes:

This segment is used to specify quantity allowances/charges applicable for the entire Price/Sales Catalogue.

Example:
QTY+1:14'

5. Segments Layout

Segment number: 25

SG10	- C	10 -	ALC-ALI-DTM-SG11-SG12-SG13-SG14-SG15
SG11	- C	10 -	QTY-RNG
RNG	- C	1 -	Range details

Function:
To identify a range.

		EDIFACT	GS1	*	Description
6167	Range type code qualifier	M an..3	**M**		1 = Allowance range 2 = Charge range
C280	RANGE	C	**R**		
6411	Measurement unit code	M an..3	**M**		
6162	Range minimum value	C n..18	**O**		
6152	Range maximum value	C n..18	**O**		

Segment Notes:
This segment is used to specify ranges which apply to the previous QTY segment.

Example:
RNG+1+KGM:15'

5. Segments Layout

Segment number: 26

SG10	- C	10 -	ALC-ALI-DTM-SG11-SG12-SG13-SG14-SG15
SG12	- C	10 -	PCD-RNG
PCD	- M	1 -	Percentage details

Function:

To specify percentage information.

		EDIFACT	GS1	*	Description
C501	PERCENTAGE DETAILS	M	**M**		
5245	Percentage type code qualifier	M an..3	**M**		3 = Allowance or charge
5482	Percentage	C n..10	**R**		
5249	Percentage basis identification code	C an..3	**O**		
1131	Code list identification code	C an..17	**N**		
3055	Code list responsible agency code	C an..3	**N**		
4405	Status description code	C an..3	**N**		

Segment Notes:

This segment is used to specify percentage allowances/charges applicable for the entire Price/Sales Catalogue.

Example:
PCD+3:1.25'

5. Segments Layout

Segment number: 27

SG10	- C	10 -	ALC-ALI-DTM-SG11-SG12-SG13-SG14-SG15
SG12	- C	10 -	PCD-RNG
RNG	- C	1 -	Range details

Function:

To identify a range.

		EDIFACT	GS1	*	Description
6167	Range type code qualifier	M an..3	**M**		1 = Allowance range 2 = Charge range
C280	RANGE	C	**R**		
6411	Measurement unit code	M an..3	**M**		
6162	Range minimum value	C n..18	**O**		
6152	Range maximum value	C n..18	**O**		

Segment Notes:

This segment is used to specify ranges which apply to the previous PCD segment.

Example:
RNG+1+KGM:250:600'

5. Segments Layout

Segment number: 28

SG10	- C	10 -	ALC-ALI-DTM-SG11-SG12-SG13-SG14-SG15
SG13	- C	10 -	MOA-RNG
MOA	- M	1 -	Monetary amount

Function:

To specify a monetary amount.

		EDIFACT	GS1	*	Description
C516	MONETARY AMOUNT	M	**M**		
5025	Monetary amount type code qualifier	M an..3	**M**		23 = Charge amount 204 = Allowance amount
5004	Monetary amount	C n..35	**R**		
6345	Currency identification code	C an..3	**O**		
6343	Currency type code qualifier	C an..3	**O**		
4405	Status description code	C an..3	**O**		

Segment Notes:

This segment is used to specify monetary amount allowances/charges applicable for the entire Price/Sales Catalogue.

Example:
MOA+23:500'

5. Segments Layout

Segment number: 29

SG10	- C	10 -	ALC-ALI-DTM-SG11-SG12-SG13-SG14-SG15
SG13	- C	10 -	MOA-RNG
RNG	- C	1 -	Range details

Function:

To identify a range.

		EDIFACT	GS1	*	Description
6167	Range type code qualifier	M an..3	**M**		1 = Allowance range 2 = Charge range
C280	RANGE	C	**R**		
6411	Measurement unit code	M an..3	**M**		
6162	Range minimum value	C n..18	**O**		
6152	Range maximum value	C n..18	**O**		

Segment Notes:

This segment is used to specify ranges which apply to the previous MOA segment.

Example:
RNG+1+KGM:800:1200'

5. Segments Layout

Segment number: 30

SG10	- C	10 -	ALC-ALI-DTM-SG11-SG12-SG13-SG14-SG15
SG14	- C	10 -	RTE-RNG
RTE	- M	1 -	Rate details

Function:
To specify rate information.

		EDIFACT	GS1	*	Description
C128	RATE DETAILS	M	**M**		
5419	Rate type code qualifier	M an..3	**M**		1 = Allowance rate 2 = Charge rate
5420	Unit price basis rate	M n..15	**M**		
5284	Unit price basis value	C n..9	**A**		
6411	Measurement unit code	C an..3	**O**		
4405	Status description code	C an..3	**N**		

Segment Notes:
This segment is used to specify rate allowances/charges applicable for the entire Price/Sales Catalogue.

Example:
RTE+2:5.5'

5. Segments Layout

Segment number: 31

SG10	- C	10 -	ALC-ALI-DTM-SG11-SG12-SG13-SG14-SG15
SG14	- C	10 -	RTE-RNG
RNG	- C	1 -	Range details

Function:

To identify a range.

		EDIFACT	GS1	*	Description
6167	Range type code qualifier	M an..3	**M**		1 = Allowance range 2 = Charge range
C280	RANGE	C	**R**		
6411	Measurement unit code	M an..3	**M**		
6162	Range minimum value	C n..18	**O**		
6152	Range maximum value	C n..18	**O**		

Segment Notes:

This segment is used to specify ranges which apply to the previous RTE segment.

Example:
RNG+2+KGM:20:100'

5. Segments Layout

Segment number: 32

SG10	- C	10 -	ALC-ALI-DTM-SG11-SG12-SG13-SG14-SG15
SG15	- C	5 -	TAX-MOA
TAX	- M	1 -	Duty/tax/fee details

Function:

To specify relevant duty/tax/fee information.

		EDIFACT	GS1	*	Description
5283	Duty or tax or fee function code qualifier	M an..3	**M**		5 = Customs duty 7 = Tax
C241	DUTY/TAX/FEE TYPE	C	**D**		
5153	Duty or tax or fee type name code	C an..3	**O**		ENV = Environmental tax GST = Goods and services tax VAT = Value added tax
1131	Code list identification code	C an..17	**O**		
3055	Code list responsible agency code	C an..3	**D**		
5152	Duty or tax or fee type name	C an..35	**O**		
C533	DUTY/TAX/FEE ACCOUNT DETAIL	C	**O**		
5289	Duty or tax or fee account code	M an..6	**M**		
1131	Code list identification code	C an..17	**O**		
3055	Code list responsible agency code	C an..3	**D**		
5286	Duty or tax or fee assessment basis value	C an..15	**O**		
C243	DUTY/TAX/FEE DETAIL	C	**A**		
5279	Duty or tax or fee rate code	C an..7	**O**		
1131	Code list identification code	C an..17	**O**		
3055	Code list responsible agency code	C an..3	**D**		
5278	Duty or tax or fee rate	C an..17	**R**		The actual rate of tax/duty.
5273	Duty or tax or fee rate basis code	C an..12	**O**		
1131	Code list identification code	C an..17	**O**		
3055	Code list responsible agency code	C an..3	**D**		
5305	Duty or tax or fee category code	C an..3	**D**		A = Mixed tax rate E = Exempt from tax S = Standard rate Tax types and categories will vary from country to country. They should be defined by national guidelines.
3446	Party tax identifier	C an..20	**N**		
1227	Calculation sequence code	C an..3	**N**		

Segment Notes:

This segment is used to specify any taxes or duties which are due on the allowances or charges which have been

5. Segments Layout

Segment number: 32

specified for the entire Price/Sales Catalogue.

Example:
TAX+7+VAT+++:::17.5+S'

5. Segments Layout

Segment number: 33

SG10	- C	10 -	ALC-ALI-DTM-SG11-SG12-SG13-SG14-SG15
SG15	- C	5 -	TAX-MOA
MOA	- C	1 -	Monetary amount

Function:

To specify a monetary amount.

		EDIFACT	GS1	*	Description
C516	MONETARY AMOUNT	M	**M**		
5025	Monetary amount type code qualifier	M an..3	**M**		124 = Tax amount 125 = Taxable amount
5004	Monetary amount	C n..35	**R**		
6345	Currency identification code	C an..3	**N**		
6343	Currency type code qualifier	C an..3	**N**		
4405	Status description code	C an..3	**N**		

Segment Notes:

This segment is used to specify tax amounts for the previous TAX segment.

Example:
MOA+124:48.90'

5. Segments Layout

Segment number: 34

SG16	- C	9 -	TRU-DTM
TRU	- M	1 -	Technical rules

Function:

A segment specifying technical rules.

		EDIFACT	GS1	*	Description
7402	Object identifier	M an..35	**M**		
1056	Version identifier	C an..9	**O**		
1058	Release identifier	C an..9	**O**		
7175	Rule part identifier	C an..7	**O**		
3055	Code list responsible agency code	C an..3	**O**		5 = ISO (International Organization for Standardization)

Segment Notes:

This segment is used to specify any technical rules which relate to all of the products contained in the message.

Example :
TRU+9001+2+1+4+5'
Part 4 of the technical rule 9001, version 2, release 1, issued by ISO.

5. Segments Layout

Segment number: 35

SG16	- C	9 -	TRU-DTM
DTM	- C	9 -	Date/time/period

Function:

To specify date, and/or time, or period.

		EDIFACT	GS1	*	Description
C507	DATE/TIME/PERIOD	M	**M**		
2005	Date or time or period function code qualifier	M an..3	**M**		261 = Release date/time
2380	Date or time or period value	C an..35	**R**		
2379	Date or time or period format code	C an..3	**R**		102 = CCYYMMDD

Segment Notes:

This segment is used to specify the release date of the technical rules given in the previous TRU segment.

DTM+261:20020905:102'

5. Segments Layout

Segment number: 36

SG17	- C	1000 -	PGI-DTM-QTY-ALI-FTX-SG18-SG19-SG20-SG21-SG27-SG30-SG31-SG32-SG33-SG34-SG35-SG36
PGI	- M	1 -	Product group information

Function:

To indicate the group in which a product belongs.

		EDIFACT	GS1	*	Description
5379	Product group type code	M an..3	**M**	*	2 = No price group used 3 = Catalogue 4 = Group of products with same price 9 = No group used 10 = Price group 11 = Product group 12 = Promotional group 14 = Geographical target market division/ subdivision code 10E = Group of complementary products (GS1 Temporary Code) BAX = Base article execution rules group (GS1 Temporary Code) BEX = GTIN allocation group for special purposes (GS1 Temporary Code) DEF = Definition Group (GS1 Temporary Code) MUL = Metadata linked to multi-media objects group (GS1 Temporary Code) PAX = Price allocation group (GS1 Temporary Code) PXC = Price execution rule group (GS1 Temporary Code)
C288	PRODUCT GROUP	C	**O**		
5389	Product group name code	C an..25	**O**		
1131	Code list identification code	C an..17	**O**		
3055	Code list responsible agency code	C an..3	**D**		9 = GS1 91 = Assigned by supplier or supplier's agent 92 = Assigned by buyer or buyer's agent
5388	Product group name	C an..35	**O**		

Segment Notes:

This segment is used to group a set of related products together.
The detail section of the Price/Sales Catalogue starts with the PGI segment. PGI is used to group products, by price, by product type, by buying group, and/or by supplier/manufacturer.
In the case of product grouping then :
DE 5379: Code value '10E' is use to identify a group of product which when put together forms a finished item, e.g. a plate can be sold individually but can be put together with knives, forks, cups, etc., to form a dinner service.
DE 5389 and 5388: These data element are used to provide the identification of a product group. Identification numbers provided here may be allocated on a bi-lateral basis between trading partners.
Products can also be grouped by supplier and/or manufacturer, identified in the NAD-CTA-COM segment group following the PGI segment.
If no grouping is used then:
DE 5379 in PGI has the value 2 = No price group used.

Example:
PGI+3+KS::9:DAIRY FOODS'

5. Segments Layout

Segment number: 37

SG17	- C	1000 -	PGI-DTM-QTY-ALI-FTX-SG18-SG19-SG20-SG21-SG27-SG30-SG31-SG32-SG33-SG34-SG35-SG36
DTM	- C	15 -	Date/time/period

Function:

To specify date, and/or time, or period.

		EDIFACT	GS1	*	Description
C507	DATE/TIME/PERIOD	M	**M**		
2005	Date or time or period function code qualifier	M an..3	**M**		157 = Validity start date 273 = Validity period 321 = Promotion date/period 360 = Sell by date 361 = Best before date 363 = Total shelf life period 382 = Earliest sale date 423 = First date of ordering 424 = Last date of ordering 496 = Reinstatement date
2380	Date or time or period value	C an..35	**R**		
2379	Date or time or period format code	C an..3	**R**		102 = CCYYMMDD 718 = CCYYMMDD-CCYYMMDD

Segment Notes:

This segment is used to provide dates associated with the current product group.

Example:
DTM+273:20020825:102'

5. Segments Layout

Segment number: 38

SG17	- C	1000 -	PGI-DTM-QTY-ALI-FTX-SG18-SG19-SG20-SG21-SG27-SG30-SG31-SG32-SG33-SG34-SG35-SG36
QTY	- C	10 -	Quantity

Function:

To specify a pertinent quantity.

		EDIFACT	GS1	*	Description
C186	QUANTITY DETAILS	M	**M**		
6063	Quantity type code qualifier	M an..3	**M**		53 = Minimum order quantity 54 = Maximum order quantity 129 = Units per unit price 164 = Delivery batch 193 = Free quantity included 200 = Free quantity not included 507 = Free quantity basis
6060	Quantity	M an..35	**M**		
6411	Measurement unit code	C an..3	**D**		This data element is only used if the current product is of variable quantity.

Segment Notes:

This segment is used to specify quantity details (e.g. case quantity) relevant for the entire product group.

Example:
QTY+164:14'

5. Segments Layout

Segment number: 39

SG17	- C	1000 -	PGI-DTM-QTY-ALI-FTX-SG18-SG19-SG20-SG21-SG27-SG30-SG31-SG32-SG33-SG34-SG35-SG36
ALI	- C	5 -	Additional information

Function:

To indicate that special conditions due to the origin, customs preference, fiscal or commercial factors are applicable.

		EDIFACT	GS1	*	Description
3239	Country of origin name code	C an..3	**O**		Use ISO 3166 2 alpha code
9213	Duty regime type code	C an..3	**O**		
4183	Special condition code	C an..3	**O**		6 = Subject to bonus 8 = Subject to discount 18 = Item subject to national export restrictions
4183	Special condition code	C an..3	**O**		
4183	Special condition code	C an..3	**O**		
4183	Special condition code	C an..3	**O**		
4183	Special condition code	C an..3	**O**		

Segment Notes:

This segment is used to indicate any special conditions to which the group is subject.

Example:
ALI+++8'

5. Segments Layout

Segment number: 40

SG17	- C	1000 -	PGI-DTM-QTY-ALI-FTX-SG18-SG19-SG20-SG21-SG27-SG30-SG31-SG32-SG33-SG34-SG35-SG36
FTX	- C	5 -	Free text

Function:

To provide free form or coded text information.

		EDIFACT	GS1	*	Description
4451	Text subject code qualifier	M an..3	**M**		PUR = Purchasing information
4453	Free text function code	C an..3	**A**	*	1 = Text for subsequent use
C107	TEXT REFERENCE	C	**D**		References to a standard text. This composite is only used when trading partners have agreed to use mutually defined code values.
4441	Free text value code	M an..17	**M**		001 = ...standard text...
1131	Code list identification code	C an..17	**O**		
3055	Code list responsible agency code	C an..3	**D**		91 = Assigned by supplier or supplier's agent 92 = Assigned by buyer or buyer's agent
C108	TEXT LITERAL	C	**D**		This composite is only used if coded text can not be used.
4440	Free text value	M an..512	**M**		
4440	Free text value	C an..512	**O**		
4440	Free text value	C an..512	**O**		
4440	Free text value	C an..512	**O**		
4440	Free text value	C an..512	**O**		
3453	Language name code	C an..3	**D**		ISO 639 two alpha code This data element is only used when non coded free text has been provided in data element C108.
4447	Free text format code	C an..3	**N**		

Segment Notes:

This segment is used to provide free text information related to the complete product group.
Use of this segment in free form is not recommended since it may inhibit automatic processing of the price/sales catalogue. Coded references to standard texts is an available functionality which enables automatic processing and reduces transmission and processing overheads. Standard texts should be mutually defined among trading partners and can be used to cover legal and other requirements.

Example:
FTX+PUR+1+001::91'

5. Segments Layout

Segment number: 41

SG17	- C	1000 -	PGI-DTM-QTY-ALI-FTX-SG18-SG19-SG20-SG21-SG27-SG30-SG31-SG32-SG33-SG34-SG35-SG36
SG18	- C	10 -	CUX-DTM
CUX	- M	1 -	Currencies

Function:

To specify currencies used in the transaction and relevant details for the rate of exchange.

		EDIFACT	GS1	*	Description
C504	CURRENCY DETAILS	C	**R**		
6347	Currency usage code qualifier	M an..3	**M**	*	2 = Reference currency
6345	Currency identification code	C an..3	**R**		ISO 4217 three alpha
6343	Currency type code qualifier	C an..3	**R**		8 = Price list currency
6348	Currency rate value	C n..4	**N**		
C504	CURRENCY DETAILS	C	**D**		The second occurrence of this composite is only used if a target currency is being specified.
6347	Currency usage code qualifier	M an..3	**M**		3 = Target currency
6345	Currency identification code	C an..3	**R**		ISO 4217 three alpha
6343	Currency type code qualifier	C an..3	**R**		11 = Payment currency
6348	Currency rate value	C n..4	**O**		
5402	Currency exchange rate	C n..12	**D**		The rate of exchange which applies between the reference and target currency. The rate of exchange is only used if a target currency has been identified in the second occurrence of C504.
6341	Exchange rate currency market identifier	C an..3	**N**		

Segment Notes:

This segment is used to specify currency information which applies to the entire group.
The CUX segment is mandatory for international exchanges.
When specifying Reference and Target Currencies, one occurrence of CUX is all that is required. The reference currency is identified in the first occurrence of the composite C504, with the target currency specified in the second occurrence of C504. The rate of exchange between the two is detailed in DE 5402.
The general rule for calculating rate of exchange is as follows:
Reference Currency multiplied by Rate = Target Currency.

Example:
Where only the price list currency needs to be identified for national trade.
CUX+2:EUR:8'

CUX+2:EUR:8+3:USD:11+0.90243'

5. Segments Layout

Segment number: 42

SG17	- C	1000 -	PGI-DTM-QTY-ALI-FTX-SG18-SG19-SG20-SG21-SG27-SG30-SG31-SG32-SG33-SG34-SG35-SG36
SG18	- C	10 -	CUX-DTM
DTM	- C	5 -	Date/time/period

Function:

To specify date, and/or time, or period.

		EDIFACT	GS1	*	Description
C507	DATE/TIME/PERIOD	M	**M**		
2005	Date or time or period function code qualifier	M an..3	**M**	*	134 = Rate of exchange date/time 194 = Start date/time 206 = End date/time
2380	Date or time or period value	C an..35	**R**		
2379	Date or time or period format code	C an..3	**R**		102 = CCYYMMDD 203 = CCYYMMDDHHMM 718 = CCYYMMDD-CCYYMMDD

Segment Notes:

This segment is used to specify dates related to the previous CUX segment.

Example:
DTM+134:20020701:102'

5. Segments Layout

Segment number: 43

SG17	- C	1000 -	PGI-DTM-QTY-ALI-FTX-SG18-SG19-SG20-SG21-SG27-SG30-SG31-SG32-SG33-SG34-SG35-SG36
SG19	- C	100 -	PRI-CUX-APR-RNG-DTM
PRI	- M	1 -	Price details

Function:

To specify price information.

		EDIFACT	GS1	*	Description
C509	PRICE INFORMATION	C	**R**		
5125	Price code qualifier	M an..3	**M**		AAA = Calculation net AAA - The price stated is the net price including all allowances and charges and excluding taxes. Allowances and charges may be stated for information purposes only. AAE = Information price, excluding allowances or charges, including taxes AAF = Information price, excluding allowances or charges and taxes INF = Information INF - The price stated is a fixed price and provided for information purposes only. AAH = Subject to escalation and price adjustment AAQ = Firm price ABL = Base price ABM = Base price difference Use the codes AAH, AAQ, ABL, ABM when dealing with CSA (customer specific articles).
5118	Price amount	C n..15	**R**		
5375	Price type code	C an..3	**O**		CA = Catalogue CT = Contract
5387	Price specification code	C an..3	**O**		AAE = Not subject to fluctuation ALT = Alternate price DPR = Discount price RTP = Retail price
5284	Unit price basis value	C n..9	**D**		
6411	Measurement unit code	C an..3	**D**		
5213	Sub-line item price change operation code	C an..3	**N**		

Segment Notes:

This segment is used to provide pricing information which is relevant to a complete product group.

Example:
PRI+AAA:14.58:CT:AAE'

Dependency Notes:
Data elements 5284 and 6411 are used when a product is a variable quantity product, e.g. price per 200 kilos, or when the unit of measure for purchasing, delivery, and invoicing are different for a product, e.g. sugar is not a variable quantity product but ordered and delivered in packs, and invoiced in kilos or tonnes.

5. Segments Layout

Segment number: 44

SG17	- C	1000 -	PGI-DTM-QTY-ALI-FTX-SG18-SG19-SG20-SG21-SG27-SG30-SG31-SG32-SG33-SG34-SG35-SG36
SG19	- C	100 -	PRI-CUX-APR-RNG-DTM
CUX	- C	1 -	Currencies

Function:

To specify currencies used in the transaction and relevant details for the rate of exchange.

		EDIFACT	GS1	*	Description
C504	CURRENCY DETAILS	C	**R**		
6347	Currency usage code qualifier	M an..3	**M**	*	2 = Reference currency
6345	Currency identification code	C an..3	**R**		ISO 4217 three alpha
6343	Currency type code qualifier	C an..3	**R**	*	8 = Price list currency 11 = Payment currency
6348	Currency rate value	C n..4	**N**		
C504	CURRENCY DETAILS	C	**D**		The second occurrence of this composite is only used if a target currency is being specified.
6347	Currency usage code qualifier	M an..3	**M**	*	3 = Target currency
6345	Currency identification code	C an..3	**R**		ISO 4217 three alpha
6343	Currency type code qualifier	C an..3	**R**	*	8 = Price list currency 11 = Payment currency
6348	Currency rate value	C n..4	**N**		
5402	Currency exchange rate	C n..12	**D**		The rate of exchange which applies between the reference and the target currency The rate of exchange is only used if a target currency has been identified in the second occurrence of C504.
6341	Exchange rate currency market identifier	C an..3	**N**		

Segment Notes:

This segment is used to provide currency information for the whole product group.
The CUX segment is mandatory for international exchanges.
When specifying Reference and Target Currencies, one occurrence of CUX is all that is required. The reference currency is identified in the first occurrence of the composite C504, with the target currency specified in the second occurrence of C504. The rate of exchange between the two is detailed in DE 5402.
The general rule for calculating rate of exchange is as follows:
Reference Currency multiplied by Rate = Target Currency.

Example:
Where only the price list currency needs to be identified for national trade.
CUX+2:EUR:8'

CUX+2:EUR:8+3:USD:11+0.90243'

5. Segments Layout

Segment number: 45

SG17	- C	1000 -	PGI-DTM-QTY-ALI-FTX-SG18-SG19-SG20-SG21-SG27-SG30-SG31-SG32-SG33-SG34-SG35-SG36
SG19	- C	100 -	PRI-CUX-APR-RNG-DTM
APR	- C	99 -	Additional price information

Function:

To provide information concerning pricing related to class of trade, price multiplier, and reason for change.

		EDIFACT	GS1	*	Description
4043	Trade class code	C an..3	**N**		
C138	PRICE MULTIPLIER INFORMATION	C	**N**		
5394	Price multiplier rate	M n..12			
5393	Price multiplier type code qualifier	C an..3			
C960	REASON FOR CHANGE	C	**A**		
4295	Change reason description code	C an..3	**R**		AA = Member attribute change AC = Member category change AQ = Alternate quantity and unit of measurement
1131	Code list identification code	C an..17	**O**		
3055	Code list responsible agency code	C an..3	**D**		
4294	Change reason description	C an..35	**O**		

Segment Notes:

This segment is used to provide a reason for a change in the price specified in the PRI segment.

Example:
APR+++AA'

5. Segments Layout

Segment number: 46

SG17	- C	1000 -	PGI-DTM-QTY-ALI-FTX-SG18-SG19-SG20-SG21-SG27-SG30-SG31-SG32-SG33-SG34-SG35-SG36
SG19	- C	100 -	PRI-CUX-APR-RNG-DTM
RNG	- C	1 -	Range details

Function:

To identify a range.

		EDIFACT	GS1	*	Description
6167	Range type code qualifier	M an..3	**M**		4 = Quantity range
C280	RANGE	C	**R**		
6411	Measurement unit code	M an..3	**M**		
6162	Range minimum value	C n..18	**O**		
6152	Range maximum value	C n..18	**O**		

Segment Notes:

This segment is used to specify ranges related to prices provided in the PRI segment, e.g. price of 10000 EUR for quantities between 101 and 200 units, price of 19000 EUR for quantities between 201 and 300 units.

Example:
RNG+4+KGM:15'

5. Segments Layout

Segment number: 47

SG17	- C	1000 -	PGI-DTM-QTY-ALI-FTX-SG18-SG19-SG20-SG21-SG27-SG30-SG31-SG32-SG33-SG34-SG35-SG36
SG19	- C	100 -	PRI-CUX-APR-RNG-DTM
DTM	- C	5 -	Date/time/period

Function:

To specify date, and/or time, or period.

		EDIFACT	GS1	*	Description
C507	DATE/TIME/PERIOD	M	**M**		
2005	Date or time or period function code qualifier	M an..3	**M**		194 = Start date/time 206 = End date/time 273 = Validity period
2380	Date or time or period value	C an..35	**R**		
2379	Date or time or period format code	C an..3	**R**		102 = CCYYMMDD 718 = CCYYMMDD-CCYYMMDD

Segment Notes:

This segment is used to identify specific dates and times associated with pricing information.

Example:
DTM+194:20020801:102'
DTM+273:2002011220020331:718'
The validity period of the price is from the 12th of January 2002 to the 31st of March 2002.

5. Segments Layout

Segment number: 48

SG17	- C	1000 -	PGI-DTM-QTY-ALI-FTX-SG18-SG19-SG20-SG21-SG27-SG30-SG31-SG32-SG33-SG34-SG35-SG36
SG20	- C	10 -	TAX-MOA
TAX	- M	1 -	Duty/tax/fee details

Function:

To specify relevant duty/tax/fee information.

		EDIFACT	GS1	*	Description
5283	Duty or tax or fee function code qualifier	M an..3	**M**		5 = Customs duty 7 = Tax
C241	DUTY/TAX/FEE TYPE	C	**D**		
5153	Duty or tax or fee type name code	C an..3	**O**		ENV = Environmental tax GST = Goods and services tax VAT = Value added tax
1131	Code list identification code	C an..17	**O**		
3055	Code list responsible agency code	C an..3	**D**		
5152	Duty or tax or fee type name	C an..35	**O**		
C533	DUTY/TAX/FEE ACCOUNT DETAIL	C	**O**		
5289	Duty or tax or fee account code	M an..6	**M**		
1131	Code list identification code	C an..17	**O**		
3055	Code list responsible agency code	C an..3	**D**		
5286	Duty or tax or fee assessment basis value	C an..15	**O**		
C243	DUTY/TAX/FEE DETAIL	C	**A**		
5279	Duty or tax or fee rate code	C an..7	**O**		
1131	Code list identification code	C an..17	**O**		
3055	Code list responsible agency code	C an..3	**D**		
5278	Duty or tax or fee rate	C an..17	**R**		The actual rate of tax/duty.
5273	Duty or tax or fee rate basis code	C an..12	**O**		
1131	Code list identification code	C an..17	**O**		
3055	Code list responsible agency code	C an..3	**D**		
5305	Duty or tax or fee category code	C an..3	**D**		A = Mixed tax rate E = Exempt from tax S = Standard rate Tax types and categories will vary from country to country. They should be defined by national guidelines.
3446	Party tax identifier	C an..20	**N**		
1227	Calculation sequence code	C an..3	**N**		

Segment Notes:

5. Segments Layout

Segment number: 48

This segment is used to specify any taxes or duties which apply for the entire product group.

Example:
TAX+7+VAT+++:::17.5+S'

5. Segments Layout

Segment number: 49

SG17	- C	1000	-	PGI-DTM-QTY-ALI-FTX-SG18-SG19-SG20-SG21-SG27-SG30-SG31-SG32-SG33-SG34-SG35-SG36
SG20	- C	10	-	TAX-MOA
MOA	- C	1	-	Monetary amount

Function:

To specify a monetary amount.

		EDIFACT	GS1	*	Description
C516	MONETARY AMOUNT	M	**M**		
5025	Monetary amount type code qualifier	M an..3	**M**		124 = Tax amount 125 = Taxable amount
5004	Monetary amount	C n..35	**R**		
6345	Currency identification code	C an..3	**N**		
6343	Currency type code qualifier	C an..3	**N**		
4405	Status description code	C an..3	**N**		

Segment Notes:

This segment is used to specify tax amounts for the previous TAX segment.

Example:
MOA+124:48.90'

5. Segments Layout

Segment number: 50

SG17	- C	1000 -	PGI-DTM-QTY-ALI-FTX-SG18-SG19-SG20-SG21-SG27-SG30-SG31-SG32-SG33-SG34-SG35-SG36
SG21	- C	99 -	ALC-ALI-SG22-SG23-SG24-SG25-SG26
ALC	- M	1 -	Allowance or charge

Function:

To identify allowance or charge details.

		EDIFACT	GS1	*	Description
5463	Allowance or charge code qualifier	M an..3	**M**		A = Allowance C = Charge
C552	ALLOWANCE/CHARGE INFORMATION	C	**O**		
1230	Allowance or charge identifier	C an..35	**D**		If code '69' is used in DE 5189, the agreement number must be specified in DE 1230.
5189	Allowance or charge identification code	C an..3	**O**		69 = Charge for a customer specific finish 102 = Fixed long term 103 = Temporary 104 = Standard
4471	Settlement means code	C an..3	**O**		5 = Charge to be paid by vendor 6 = Charge to be paid by customer
1227	Calculation sequence code	C an..3	**D**		1 = First step of calculation 2 = Second step of calculation etc, etc, etc..... 9 = Ninth step of calculation The calculation sequence indicator is used when multiple allowances and/or charges are applicable. If various allowances and/or charges percentages, quantities, monetary amounts or rates are applicable to the same base price, then the calculation sequence indicator will always equal one. If the various allowances and/or charges are applied against a fluctuating price (constantly because of the application of other allowances and/or charges) then the sequence of calculation is indicated using this data element. If the allowance or charge is not to be applied against a fixed price then the calculation sequence indicator must be included.
C214	SPECIAL SERVICES IDENTIFICATION	C	**D**		This composite is only used if the supplier knows the type of allowance or charge.
7161	Special service description code	C an..3	**R**		ABZ = Miscellaneous rebate or discount DDA = Dealer discount/allowance (GS1 Temporary Code) TD = Trade discount
1131	Code list identification code	C an..17	**N**		
3055	Code list responsible agency code	C an..3	**D**	*	9 = GS1 This data element is only used if an GS1 code value is used in data element 7161.
7160	Special service description	C an..35	**O**		
7160	Special service description	C an..35	**O**		

Segment Notes:

This segment is used to specify any allowances or charges related to the complete product group.

5. Segments Layout

Segment number: 50

Example:
ALC+A+++1'

5. Segments Layout

Segment number: 51

SG17	- C	1000 -	PGI-DTM-QTY-ALI-FTX-SG18-SG19-SG20-SG21-SG27-SG30-SG31-SG32-SG33-SG34-SG35-SG36
SG21	- C	99 -	ALC-ALI-SG22-SG23-SG24-SG25-SG26
ALI	- C	5 -	Additional information

Function:

To indicate that special conditions due to the origin, customs preference, fiscal or commercial factors are applicable.

		EDIFACT	GS1	*	Description
3239	Country of origin name code	C an..3	**O**		Use ISO 3166 two alpha
9213	Duty regime type code	C an..3	**O**		1 = Origin subject to EC/EFTA preference 2 = Origin subject to other preference agreement
4183	Special condition code	C an..3	**O**		6 = Subject to bonus 8 = Subject to discount
4183	Special condition code	C an..3	**O**		
4183	Special condition code	C an..3	**O**		
4183	Special condition code	C an..3	**O**		
4183	Special condition code	C an..3	**O**		

Segment Notes:

This segment is used to indicate any special conditions related to the allowances and/or charges specified in the ALC segment.

Example:
ALI+++8'

5. Segments Layout

Segment number: 52

SG17	- C	1000 -	PGI-DTM-QTY-ALI-FTX-SG18-SG19-SG20-SG21-SG27-SG30-SG31-SG32-SG33-SG34-SG35-SG36
SG21	- C	99 -	ALC-ALI-SG22-SG23-SG24-SG25-SG26
SG22	- C	1 -	QTY-RNG
QTY	- M	1 -	Quantity

Function:

To specify a pertinent quantity.

		EDIFACT	GS1	*	Description
C186	QUANTITY DETAILS	M	**M**		
6063	Quantity type code qualifier	M an..3	**M**		1 = Discrete quantity
6060	Quantity	M an..35	**M**		
6411	Measurement unit code	C an..3	**D**		This data element is only used if the current product is of variable quantity.

Segment Notes:

This segment is used to specify quantity allowances/charges applicable for the entire product group.

Example:
QTY+1:14'

5. Segments Layout

Segment number: 53

SG17	- C	1000	-	PGI-DTM-QTY-ALI-FTX-SG18-SG19-SG20-SG21-SG27-SG30-SG31-SG32-SG33-SG34-SG35-SG36
SG21	- C	99	-	ALC-ALI-SG22-SG23-SG24-SG25-SG26
SG22	- C	1	-	QTY-RNG
RNG	- C	1	-	Range details

Function:

To identify a range.

		EDIFACT	GS1	*	Description
6167	Range type code qualifier	M an..3	**M**		1 = Allowance range 2 = Charge range
C280	RANGE	C	**R**		
6411	Measurement unit code	M an..3	**M**		
6162	Range minimum value	C n..18	**O**		
6152	Range maximum value	C n..18	**O**		

Segment Notes:

This segment is used to specify ranges which apply to the previous QTY segment.

Example:
RNG+1+KGM:15'

5. Segments Layout

Segment number: 54

SG17	- C	1000 -	PGI-DTM-QTY-ALI-FTX-SG18-SG19-SG20-SG21-SG27-SG30-SG31-SG32-SG33-SG34-SG35-SG36
SG21	- C	99 -	ALC-ALI-SG22-SG23-SG24-SG25-SG26
SG23	- C	1 -	PCD-RNG
PCD	- M	1 -	Percentage details

Function:

To specify percentage information.

		EDIFACT	GS1	*	Description
C501	PERCENTAGE DETAILS	M	**M**		
5245	Percentage type code qualifier	M an..3	**M**		3 = Allowance or charge
5482	Percentage	C n..10	**R**		
5249	Percentage basis identification code	C an..3	**O**		
1131	Code list identification code	C an..17	**O**		
3055	Code list responsible agency code	C an..3	**D**		
4405	Status description code	C an..3	**N**		

Segment Notes:

This segment is used to specify percentage allowances/charges applicable for the entire product group.

Example:
PCD+3:1.25'

5. Segments Layout

Segment number: 55

SG17	- C	1000	-	PGI-DTM-QTY-ALI-FTX-SG18-SG19-SG20-SG21-SG27-SG30-SG31-SG32-SG33-SG34-SG35-SG36
SG21	- C	99	-	ALC-ALI-SG22-SG23-SG24-SG25-SG26
SG23	- C	1	-	PCD-RNG
RNG	- C	1	-	Range details

Function:

To identify a range.

		EDIFACT	GS1	*	Description
6167	Range type code qualifier	M an..3	**M**		1 = Allowance range 2 = Charge range
C280	RANGE	C	**R**		
6411	Measurement unit code	M an..3	**M**		
6162	Range minimum value	C n..18	**O**		
6152	Range maximum value	C n..18	**O**		

Segment Notes:

This segment is used to specify ranges which apply to the previous PCD segment.

Example:
RNG+1+KGM:250:600'

5. Segments Layout

Segment number: 56

SG17	- C	1000 -	PGI-DTM-QTY-ALI-FTX-SG18-SG19-SG20-SG21-SG27-SG30-SG31-SG32-SG33-SG34-SG35-SG36
SG21	- C	99 -	ALC-ALI-SG22-SG23-SG24-SG25-SG26
SG24	- C	2 -	MOA-RNG
MOA	- M	1 -	Monetary amount

Function:

To specify a monetary amount.

		EDIFACT	GS1	*	Description
C516	MONETARY AMOUNT	M	**M**		
5025	Monetary amount type code qualifier	M an..3	**M**		8 = Allowance or charge amount
5004	Monetary amount	C n..35	**R**		
6345	Currency identification code	C an..3	**N**		
6343	Currency type code qualifier	C an..3	**N**		
4405	Status description code	C an..3	**N**		

Segment Notes:

This segment is used to specify monetary amount allowances/charges for the entire product group.

Example:
MOA+8:500'

5. Segments Layout

Segment number: 57

SG17	- C	1000	-	PGI-DTM-QTY-ALI-FTX-SG18-SG19-SG20-SG21-SG27-SG30-SG31-SG32-SG33-SG34-SG35-SG36
SG21	- C	99	-	ALC-ALI-SG22-SG23-SG24-SG25-SG26
SG24	- C	2	-	MOA-RNG
RNG	- C	1	-	Range details

Function:

To identify a range.

		EDIFACT	GS1	*	Description
6167	Range type code qualifier	M an..3	**M**		1 = Allowance range 2 = Charge range
C280	RANGE	C	**R**		
6411	Measurement unit code	M an..3	**M**		
6162	Range minimum value	C n..18	**O**		
6152	Range maximum value	C n..18	**O**		

Segment Notes:

This segment is used to specify ranges which apply to the previous MOA segment.

Example:
RNG+1+KGM:800:1200'

5. Segments Layout

Segment number: 58

SG17	- C	1000 -	PGI-DTM-QTY-ALI-FTX-SG18-SG19-SG20-SG21-SG27-SG30-SG31-SG32-SG33-SG34-SG35-SG36
SG21	- C	99 -	ALC-ALI-SG22-SG23-SG24-SG25-SG26
SG25	- C	1 -	RTE-RNG
RTE	- M	1 -	Rate details

Function:

To specify rate information.

		EDIFACT	GS1	*	Description
C128	RATE DETAILS	M	**M**		
5419	Rate type code qualifier	M an..3	**M**		1 = Allowance rate 2 = Charge rate
5420	Unit price basis rate	M n..15	**M**		
5284	Unit price basis value	C n..9	**A**		
6411	Measurement unit code	C an..3	**O**		
4405	Status description code	C an..3	**N**		

Segment Notes:

This segment is used to specify rate allowances/charges applicable for the entire product group.

Example:
RTE+2:5.5'

5. Segments Layout

Segment number: 59

SG17	- C	1000 -	PGI-DTM-QTY-ALI-FTX-SG18-SG19-SG20-SG21-SG27-SG30-SG31-SG32-SG33-SG34-SG35-SG36
SG21	- C	99 -	ALC-ALI-SG22-SG23-SG24-SG25-SG26
SG25	- C	1 -	RTE-RNG
RNG	- C	1 -	Range details

Function:

To identify a range.

		EDIFACT	GS1	*	Description
6167	Range type code qualifier	M an..3	**M**		1 = Allowance range 2 = Charge range
C280	RANGE	C	**R**		
6411	Measurement unit code	M an..3	**M**		
6162	Range minimum value	C n..18	**O**		
6152	Range maximum value	C n..18	**O**		

Segment Notes:

This segment is used to specify ranges which apply to the previous RTE segment.

Example:
RNG+2+AMT:20:100'

5. Segments Layout

Segment number: 60

SG17	- C	1000 -	PGI-DTM-QTY-ALI-FTX-SG18-SG19-SG20-SG21-SG27-SG30-SG31-SG32-SG33-SG34-SG35-SG36
SG21	- C	99 -	ALC-ALI-SG22-SG23-SG24-SG25-SG26
SG26	- C	5 -	TAX-MOA
TAX	- M	1 -	Duty/tax/fee details

Function:

To specify relevant duty/tax/fee information.

		EDIFACT	GS1	*	Description
5283	Duty or tax or fee function code qualifier	M an..3	**M**		5 = Customs duty 7 = Tax
C241	DUTY/TAX/FEE TYPE	C	**D**		
5153	Duty or tax or fee type name code	C an..3	**O**		ENV = Environmental tax GST = Goods and services tax VAT = Value added tax
1131	Code list identification code	C an..17	**O**		
3055	Code list responsible agency code	C an..3	**D**		
5152	Duty or tax or fee type name	C an..35	**O**		
C533	DUTY/TAX/FEE ACCOUNT DETAIL	C	**O**		
5289	Duty or tax or fee account code	M an..6	**M**		
1131	Code list identification code	C an..17	**O**		
3055	Code list responsible agency code	C an..3	**D**		
5286	Duty or tax or fee assessment basis value	C an..15	**O**		
C243	DUTY/TAX/FEE DETAIL	C	**A**		
5279	Duty or tax or fee rate code	C an..7	**O**		
1131	Code list identification code	C an..17	**O**		
3055	Code list responsible agency code	C an..3	**D**		
5278	Duty or tax or fee rate	C an..17	**R**		The actual rate of tax/duty.
5273	Duty or tax or fee rate basis code	C an..12	**O**		
1131	Code list identification code	C an..17	**O**		
3055	Code list responsible agency code	C an..3	**D**		
5305	Duty or tax or fee category code	C an..3	**D**		A = Mixed tax rate E = Exempt from tax S = Standard rate Tax types and categories will vary from country to country. They should be defined by national guidelines.
3446	Party tax identifier	C an..20	**N**		
1227	Calculation sequence code	C an..3	**N**		

5. Segments Layout

Segment number: 60

Segment Notes:

This segment is used to specify any taxes or duties which are due on the allowances or charges which have been specified for the entire product group.

Example:
TAX+7+VAT+++:::17.5+S'

5. Segments Layout

Segment number: 61

SG17	- C	1000	-	PGI-DTM-QTY-ALI-FTX-SG18-SG19-SG20-SG21-SG27-SG30-SG31-SG32-SG33-SG34-SG35-SG36
SG21	- C	99	-	ALC-ALI-SG22-SG23-SG24-SG25-SG26
SG26	- C	5	-	TAX-MOA
MOA	- C	1	-	Monetary amount

Function:

To specify a monetary amount.

		EDIFACT	GS1	*	Description
C516	MONETARY AMOUNT	M	**M**		
5025	Monetary amount type code qualifier	M an..3	**M**		124 = Tax amount 125 = Taxable amount
5004	Monetary amount	C n..35	**R**		
6345	Currency identification code	C an..3	**N**		
6343	Currency type code qualifier	C an..3	**N**		
4405	Status description code	C an..3	**N**		

Segment Notes:

This segment is used to specify tax amounts for the previous TAX segment.

Example:
MOA+124:48.90'

5. Segments Layout

Segment number: 62

SG17	- C	1000 -	PGI-DTM-QTY-ALI-FTX-SG18-SG19-SG20-SG21-SG27-SG30-SG31-SG32-SG33-SG34-SG35-SG36
SG27	- C	20 -	NAD-LOC-SG28-SG29
NAD	- M	1 -	Name and address

Function:

To specify the name/address and their related function, either by C082 only and/or unstructured by C058 or structured by C080 thru 3207.

		EDIFACT	GS1	*	Description
3035	Party function code qualifier	M an..3	**M**		DGE = Breeder MF = Manufacturer of goods SU = Supplier
C082	PARTY IDENTIFICATION DETAILS	C	**A**		
3039	Party identifier	M an..35	**M**		For identification of parties it is recommended to use GLN - Format n13.
1131	Code list identification code	C an..17	**N**		
3055	Code list responsible agency code	C an..3	**R**	*	9 = GS1
C058	NAME AND ADDRESS	C	**O**		This composite may only be used to fulfill the requirements of directive 2003/58/EC, article 4.
3124	Name and address description	M an..35	**M**		
3124	Name and address description	C an..35	**O**		
3124	Name and address description	C an..35	**O**		
3124	Name and address description	C an..35	**O**		
3124	Name and address description	C an..35	**O**		
C080	PARTY NAME	C	**D**		
3036	Party name	M an..35	**M**		Party Name in clear text.
3036	Party name	C an..35	**O**		
3036	Party name	C an..35	**O**		
3036	Party name	C an..35	**O**		
3036	Party name	C an..35	**O**		
3045	Party name format code	C an..3	**O**		
C059	STREET	C	**D**		
3042	Street and number or post office box identifier	M an..35	**M**		Building Name/Number and Street
3042	Street and number or post office box identifier	C an..35	**O**		Name and/or P.O. Box
3042	Street and number or post office box identifier	C an..35	**O**		
3042	Street and number or post office box identifier	C an..35	**O**		
3164	City name	C an..35	**D**		City/Town name, clear text.
C819	COUNTRY SUB-ENTITY DETAILS	C	**D**		
3229	Country sub-entity name code	C an..9	**O**		

5. Segments Layout

Segment number: 62

		EDIFACT	GS1	*	Description
1131	Code list identification code	C an..17	**O**		
3055	Code list responsible agency code	C an..3	**O**		
3228	Country sub-entity name	C an..70	**O**		County/State, clear text.
3251	Postal identification code	C an..17	**D**		Postal Code
3207	Country name code	C an..3	**D**		ISO 3166 two alpha code

Segment Notes:

This segment group is used to specify names and addresses relevant to the current pricing or product grouping.

Example:
NAD+MF+4012345500004::9'

Dependency Notes:
The following composites and data elements are only used when a coded name and address can not be used or there is a requirement to furnish the full name and address of the party identified. The affected composites and data elements are as follows:
C080 - C059 - 3164 - C819 - 3251 - 3207

5. Segments Layout

Segment number: 63

SG17	- C	1000 -	PGI-DTM-QTY-ALI-FTX-SG18-SG19-SG20-SG21-SG27-SG30-SG31-SG32-SG33-SG34-SG35-SG36
SG27	- C	20 -	NAD-LOC-SG28-SG29
LOC	- C	5 -	Place/location identification

Function:

To identify a place or a location and/or related locations.

		EDIFACT	GS1	*	Description
3227	Location function code qualifier	M an..3	**M**		18 = Warehouse 19 = Factory/plant
C517	LOCATION IDENTIFICATION	C	**A**		
3225	Location name code	C an..25	**A**		UN/LOCODES
1131	Code list identification code	C an..17	**O**		
3055	Code list responsible agency code	C an..3	**D**	*	3 = IATA (International Air Transport Association) DE 3055 must be used if DE 3225 is used and does not contain an UN/LOCODE.
3224	Location name	C an..256	**O**		
C519	RELATED LOCATION ONE IDENTIFICATION	C	**N**		
3223	First related location name code	C an..25			
1131	Code list identification code	C an..17			
3055	Code list responsible agency code	C an..3			
3222	First related location name	C an..70			
C553	RELATED LOCATION TWO IDENTIFICATION	C	**N**		
3233	Second related location name code	C an..25			
1131	Code list identification code	C an..17			
3055	Code list responsible agency code	C an..3			
3232	Second related location name	C an..70			
5479	Relation code	C an..3	**N**		

Segment Notes:

This segment is used to specify the location details related to the identified party in the previous NAD.

Example:
LOC+1+BE-BRU'

5. Segments Layout

Segment number: 64

SG17	- C	1000 -	PGI-DTM-QTY-ALI-FTX-SG18-SG19-SG20-SG21-SG27-SG30-SG31-SG32-SG33-SG34-SG35-SG36
SG27	- C	20 -	NAD-LOC-SG28-SG29
SG28	- C	10 -	RFF-DTM
RFF	- M	1 -	Reference

Function:

To specify a reference.

		EDIFACT	GS1	*	Description
C506	REFERENCE	M	**M**		
1153	Reference code qualifier	M an..3	**M**	*	AVG = Slaughterhouse approval number AVH = Meat cutting plant approval number AVQ = Place of packing approval number GN = Government reference number VA = VAT registration number XA = Company/place registration number YC1 = Additional party identification (GS1 Temporary Code) YC3 = Farm approval number (GS1 Temporary Code)
1154	Reference identifier	C an..70	**R**		
1156	Document line identifier	C an..6	**N**		
4000	Reference version identifier	C an..35	**N**		
1060	Revision identifier	C an..6	**N**		

Segment Notes:

This segment is used to indicate references related to the trading parties identified in the previous NAD segment.

Example:
RFF+VA:VR12345'

5. Segments Layout

Segment number: 65

SG17	- C	1000 -	PGI-DTM-QTY-ALI-FTX-SG18-SG19-SG20-SG21-SG27-SG30-SG31-SG32-SG33-SG34-SG35-SG36
SG27	- C	20 -	NAD-LOC-SG28-SG29
SG28	- C	10 -	RFF-DTM
DTM	- C	5 -	Date/time/period

Function:

To specify date, and/or time, or period.

		EDIFACT	GS1	*	Description
C507	DATE/TIME/PERIOD	M	**M**		
2005	Date or time or period function code qualifier	M an..3	**M**	*	171 = Reference date/time
2380	Date or time or period value	C an..35	**R**		
2379	Date or time or period format code	C an..3	**R**		102 = CCYYMMDD 203 = CCYYMMDDHHMM 718 = CCYYMMDD-CCYYMMDD 802 = Month 803 = Week 804 = Day

Segment Notes:

This segment is used to specify dates relating to the references given in the preceding RFF segment.

Example:
DTM+171:20020810:102'

5. Segments Layout

Segment number: 66

SG17	- C	1000 -	PGI-DTM-QTY-ALI-FTX-SG18-SG19-SG20-SG21-SG27-SG30-SG31-SG32-SG33-SG34-SG35-SG36
SG27	- C	20 -	NAD-LOC-SG28-SG29
SG29	- C	5 -	CTA-COM
CTA	- M	1 -	Contact information

Function:

To identify a person or a department to whom communication should be directed.

		EDIFACT	GS1	*	Description
3139	Contact function code	C an..3	**R**		IC = Information contact OC = Order contact PM = Product management contact QC = Quality coordinator contact
C056	DEPARTMENT OR EMPLOYEE DETAILS	C	**O**		
3413	Department or employee name code	C an..17	**O**		
3412	Department or employee name	C an..35	**O**		

Segment Notes:

This segment is used to identify the department or person within the party identified specified in the previous NAD segment.
The use of an Global Location Number GLN - Format n13 - in this segment is particularly suitable for this purpose.

Example:
CTA+IC+5012345000013'
CTA+OC+:FRED WRIGHT'

5. Segments Layout

Segment number: 67

SG17	- C	1000 -	PGI-DTM-QTY-ALI-FTX-SG18-SG19-SG20-SG21-SG27-SG30-SG31-SG32-SG33-SG34-SG35-SG36
SG27	- C	20 -	NAD-LOC-SG28-SG29
SG29	- C	5 -	CTA-COM
COM	- C	5 -	Communication contact

Function:

To identify a communication number of a department or a person to whom communication should be directed.

		EDIFACT	GS1	*	Description
C076	COMMUNICATION CONTACT	M	**M**		
3148	Communication address identifier	M an..512	**M**		
3155	Communication address code qualifier	M an..3	**M**		AO = Uniform Resource Location (URL) EI = EDI EM = Electronic mail TE = Telephone

Segment Notes:

This segment is used to identify the communications number and the type of communications used for the contact identified in the previous CTA segment.

Example:
COM+00448136533223:TE'

5. Segments Layout

Segment number: 68

SG17	- C	1000 -	PGI-DTM-QTY-ALI-FTX-SG18-SG19-SG20-SG21-SG27-SG30-SG31-SG32-SG33-SG34-SG35-SG36
SG30	- C	10 -	PAT-PCD
PAT	- M	1 -	Payment terms basis

Function:

To specify the payment terms basis.

Notes:
1. This segment will be removed effective with directory D.02B.

		EDIFACT	GS1	*	Description
4279	Payment terms type code qualifier	M an..3	**M**		1 = Basic 3 = Fixed date 7 = Extended 20 = Penalty terms 22 = Discount
C110	PAYMENT TERMS	C	**N**		
4277	Payment terms description identifier	M an..17			
1131	Code list identification code	C an..17			
3055	Code list responsible agency code	C an..3			
4276	Payment terms description	C an..35			
4276	Payment terms description	C an..35			
C112	TERMS/TIME INFORMATION	C	**O**		
2475	Time reference code	M an..3	**M**		5 = Date of invoice
2009	Terms time relation code	C an..3	**O**		3 = After reference
2151	Period type code	C an..3	**O**		D = Day M = Month WD = Working days Y = Year
2152	Period count quantity	C n..3	**O**		Number of periods of payment

Segment Notes:

This segment is used to provide payment terms information related to the entire product group.

Example:
PAT+22++5:3:D:20'

5. Segments Layout

Segment number: 69

SG17	- C	1000 -	PGI-DTM-QTY-ALI-FTX-SG18-SG19-SG20-SG21-SG27-SG30-SG31-SG32-SG33-SG34-SG35-SG36
SG30	- C	10 -	PAT-PCD
PCD	- C	1 -	Percentage details

Function:

To specify percentage information.

		EDIFACT	GS1	*	Description
C501	PERCENTAGE DETAILS	M	**M**		
5245	Percentage type code qualifier	M an..3	**M**		12 = Discount
5482	Percentage	C n..10	**R**		
5249	Percentage basis identification code	C an..3	**O**		1 = Per unit
1131	Code list identification code	C an..17	**O**		
3055	Code list responsible agency code	C an..3	**D**		
4405	Status description code	C an..3	**N**		

Segment Notes:

This segment is used to specify percentages related to the previous PAT segment.

Example:
PCD+12:10:1'
A discount percentage of 10 % per unit.

5. Segments Layout

Segment number: 70

SG17	- C	1000 -	PGI-DTM-QTY-ALI-FTX-SG18-SG19-SG20-SG21-SG27-SG30-SG31-SG32-SG33-SG34-SG35-SG36
SG31	- C	10 -	TDT
TDT	- M	1 -	Details of transport

Function:

To specify the transport details such as mode of transport, means of transport, its conveyance reference number and the identification of the means of transport.

		EDIFACT	GS1	*	Description
8051	Transport stage code qualifier	M an..3	**M**		20 = Main-carriage transport
8028	Means of transport journey identifier	C an..17	**O**		Reference number covering the transport.
C220	MODE OF TRANSPORT	C	**A**		
8067	Transport mode name code	C an..3	**R**		
8066	Transport mode name	C an..17	**N**		
C228	TRANSPORT MEANS	C	**O**		
8179	Transport means description code	C an..8	**D**		23 = Rail bulk car 31 = Truck
8178	Transport means description	C an..17	**D**		
C040	CARRIER	C	**O**		
3127	Carrier identifier	C an..17	**A**		Global Location Number GLN - Format n13
1131	Code list identification code	C an..17	**O**		
3055	Code list responsible agency code	C an..3	**D**		9 = GS1
3128	Carrier name	C an..35	**O**		
8101	Transit direction indicator code	C an..3	**N**		
C401	EXCESS TRANSPORTATION INFORMATION	C	**N**		
8457	Excess transportation reason code	M an..3			
8459	Excess transportation responsibility code	M an..3			
7130	Customer shipment authorisation identifier	C an..17			
C222	TRANSPORT IDENTIFICATION	C	**N**		
8213	Transport means identification name identifier	C an..9			
1131	Code list identification code	C an..17			
3055	Code list responsible agency code	C an..3			
8212	Transport means identification name	C an..35			
8453	Transport means nationality code	C an..3			
8281	Transport means ownership indicator code	C an..3	**N**		

5. Segments Layout

Segment number: 70

Segment Notes:

This segment is used to specify transport details which are applicable to the entire product group.

Example:
TDT+20++30+31'

Dependency Notes:
Data Elements 8179 and 8178 are only used when the type of transport must be specifically identified, that is, when a generic description such as road transport is unsuitable.

5. Segments Layout

Segment number: 71

SG17	- C	1000 -	PGI-DTM-QTY-ALI-FTX-SG18-SG19-SG20-SG21-SG27-SG30-SG31-SG32-SG33-SG34-SG35-SG36
SG32	- C	5 -	TOD-LOC
TOD	- M	1 -	Terms of delivery or transport

Function:

To specify terms of delivery or transport.

		EDIFACT	GS1	*	Description
4055	Delivery or transport terms function code	C an..3	**R**		3 = Price and despatch condition 6 = Delivery condition
4215	Transport charges payment method code	C an..3	**O**		CC = Collect MX = Mixed PC = Prepaid but charged to customer PO = Prepaid only
C100	TERMS OF DELIVERY OR TRANSPORT	C	**R**		
4053	Delivery or transport terms description code	C an..3	**R**		INCOTERMS (See EANCOM Codes Set) If INCOTERMS are applicable, then DE 3055 has to contain code value "9" and DE 1131 must be used.
1131	Code list identification code	C an..17	**D**		
3055	Code list responsible agency code	C an..3	**D**		
4052	Delivery or transport terms description	C an..70	**O**		
4052	Delivery or transport terms description	C an..70	**O**		

Segment Notes:

This segment is used to specify the terms of delivery for the current product group.
When specifying terms of delivery it is recommended in EANCOM to use Incoterms.

Example:
TOD+3++CIF:2E:9'

Dependency Notes:
Data elements 1131 and 3055 are only used if specific terms of delivery codes, which are outside those recommended by EDIFACT, are being used.

5. Segments Layout

Segment number: 72

SG17	- C	1000 -	PGI-DTM-QTY-ALI-FTX-SG18-SG19-SG20-SG21-SG27-SG30-SG31-SG32-SG33-SG34-SG35-SG36
SG32	- C	5 -	TOD-LOC
LOC	- C	2 -	Place/location identification

Function:

To identify a place or a location and/or related locations.

		EDIFACT	GS1	*	Description
3227	Location function code qualifier	M an..3	**M**		1 = Place of terms of delivery
C517	LOCATION IDENTIFICATION	C	**A**		
3225	Location name code	C an..25	**A**		UN/LOCODES
1131	Code list identification code	C an..17	**O**		
3055	Code list responsible agency code	C an..3	**D**		3 = IATA (International Air Transport Association) DE 3055 must be used if DE 3225 is used and does not contain an UN/LOCODE.
3224	Location name	C an..256	**O**		
C519	RELATED LOCATION ONE IDENTIFICATION	C	**N**		
3223	First related location name code	C an..25			
1131	Code list identification code	C an..17			
3055	Code list responsible agency code	C an..3			
3222	First related location name	C an..70			
C553	RELATED LOCATION TWO IDENTIFICATION	C	**N**		
3233	Second related location name code	C an..25			
1131	Code list identification code	C an..17			
3055	Code list responsible agency code	C an..3			
3232	Second related location name	C an..70			
5479	Relation code	C an..3	**N**		

Segment Notes:

This segment is used to provide the location applicable to de current terms of delivery.

Example:
LOC+1+BE-BRU'

5. Segments Layout

Segment number: 73

SG17	- C	1000 -	PGI-DTM-QTY-ALI-FTX-SG18-SG19-SG20-SG21-SG27-SG30-SG31-SG32-SG33-SG34-SG35-SG36
SG33	- C	10 -	PAC-MEA
PAC	- M	1 -	Package

Function:

To describe the number and type of packages/physical units.

		EDIFACT	GS1	*	Description
7224	Package quantity	C n..8	**O**		
C531	PACKAGING DETAILS	C	**O**		
7075	Packaging level code	C an..3	**N**		
7233	Packaging related description code	C an..3	**O**		50 = Package barcoded EAN-13 or EAN-8 51 = Package barcoded ITF-14 52 = Package barcoded UCC or EAN-128
7073	Packaging terms and conditions code	C an..3	**O**		
C202	PACKAGE TYPE	C	**O**		
7065	Package type description code	C an..17	**A**		
1131	Code list identification code	C an..17	**O**		
3055	Code list responsible agency code	C an..3	**D**		
7064	Type of packages	C an..35	**O**		
C402	PACKAGE TYPE IDENTIFICATION	C	**N**		
7077	Description format code	M an..3			
7064	Type of packages	M an..35			
7143	Item type identification code	C an..3			
7064	Type of packages	C an..35			
7143	Item type identification code	C an..3			
C532	RETURNABLE PACKAGE DETAILS	C	**D**		Composite C532 is only used where the packaging being described is returnable. This composite identifies who is responsible for the payment of its return.
8395	Returnable package freight payment responsibility code	C an..3	**O**		1 = Paid by customer 3 = Paid by supplier
8393	Returnable package load contents code	C an..3	**N**		

Segment Notes:

This segment is used to provide packaging information for the entire product group.

Example:
PAC+3++CR++3'

5. Segments Layout

Segment number: 74

SG17	- C	1000 -	PGI-DTM-QTY-ALI-FTX-SG18-SG19-SG20-SG21-SG27-SG30-SG31-SG32-SG33-SG34-SG35-SG36
SG33	- C	10 -	PAC-MEA
MEA	- C	10 -	Measurements

Function:

To specify physical measurements, including dimension tolerances, weights and counts.

		EDIFACT	GS1	*	Description
6311	Measurement purpose code qualifier	M an..3	**M**		PD = Physical dimensions (product ordered) SO = Storage limitation TL = Transportation equipment limitations
C502	MEASUREMENT DETAILS	C	**A**		
6313	Measured attribute code	C an..3	**A**		ADX = Transport container actual filling weight ADZ = Declared net weight AEA = Loading height AEB = Stacking height HT = Height dimension LAY = Number of layers (GS1 Temporary Code) LN = Length dimension ULY = Number of units per layer (GS1 Temporary Code) WD = Width dimension
6321	Measurement significance code	C an..3	**O**		3 = Approximately 4 = Equal to
6155	Non-discrete measurement name code	C an..17	**N**		
6154	Non-discrete measurement name	C an..70	**N**		
C174	VALUE/RANGE	C	**R**		
6411	Measurement unit code	M an..3	**M**		
6314	Measurement value	C an..18	**R**		
6162	Range minimum value	C n..18	**O**		
6152	Range maximum value	C n..18	**O**		
6432	Significant digits quantity	C n..2	**N**		
7383	Surface or layer code	C an..3	**N**		

Segment Notes:

This segment is used to provide measurement information related to the packaging details for the entire product group.

Example:
MEA+PD+HT+MMT:600'
MEA+PD+LN+MMT:300'
MEA+PD+WD+MMT:200'
Physical dimensions of the packaging (600mm x 300mm x 200mm)

5. Segments Layout

Segment number: 75

SG17	- C	1000 -	PGI-DTM-QTY-ALI-FTX-SG18-SG19-SG20-SG21-SG27-SG30-SG31-SG32-SG33-SG34-SG35-SG36
SG34	- C	99 -	EFI-CED-COM-RFF-DTM-QTY
EFI	- M	1 -	External file link identification

Function:

To specify the link of one non-EDIFACT external file to an EDIFACT message.

		EDIFACT	GS1	*	Description
C077	FILE IDENTIFICATION	M	**M**		
1508	File name	C an..35	**R**		External Object Identification This data element is used to provide the external object's identification.
7008	Item description	C an..256	**O**		
C099	FILE DETAILS	C	**R**		
1516	File format name	M an..17	**M**		This data element is used to describe the format of the external object. If the object is a computer file the format may be BMP, PCX. If the external object is a video, the format may be SECAM, PAL, etc... If the object is in a physical form such as paper or transparancies, this data element should be filled with "OTHER".
1056	Version identifier	C an..9	**O**		
1503	Data format description code	C an..3	**R**		3 = Binary 4 = Analogue
1502	Data format description	C an..35	**N**		
1050	Sequence position identifier	C an..10	**O**		Sequence number on the physical medium
9450	File compression technique name	C an..35	**N**		

Segment Notes:

This segment is used to identify an external object by indicating its identification, the format, and its sequence number on the physical medium.

Example:
EFI+ECRSTRUC+BMP::3'
The object is a binary file named ECRSTRUC.

5. Segments Layout

Segment number: 76

SG17	- C	1000 -	PGI-DTM-QTY-ALI-FTX-SG18-SG19-SG20-SG21-SG27-SG30-SG31-SG32-SG33-SG34-SG35-SG36
SG34	- C	99 -	EFI-CED-COM-RFF-DTM-QTY
CED	- C	99 -	Computer environment details

Function:

To give a precise definition of all necessary elements belonging to the configuration of a computer system like hardware, firmware, operating system, communication (VANS, network type, protocol, format) and application software.

		EDIFACT	GS1	*	Description
1501	Computer environment details code qualifier	M an..3	**M**		2 = Operating system 3 = Application software 5 = Sending system
C079	COMPUTER ENVIRONMENT IDENTIFICATION	M	**M**		
1511	Computer environment name code	C an..3	**R**		1E = CD-ROM (GS1 Permanent Code) 2E = Generating software (GS1 Permanent Code) 3E = Compression software (GS1 Permanent Code) 4E = Compression method (GS1 Permanent Code) 5E = Physical medium name (GS1 Permanent Code) 6E = Original medium type (GS1 Permanent Code)
1131	Code list identification code	C an..17	**O**		
3055	Code list responsible agency code	C an..3	**D**		9 = GS1
1510	Computer environment name	C an..35	**A**		
1056	Version identifier	C an..9	**A**		
1058	Release identifier	C an..9	**A**		
7402	Object identifier	C an..35	**N**		
9448	File generation command name	C an..35	**N**		

Segment Notes:

This segment is used to give details of the physical medium used to generate the external object.
This segment can indicate the external object's exchange medium (e.g. a CD-ROM, a diskette, tele-transmission,...), generating environment (i.e. the generating software), compression environment (i.e. the compression software used), compression method, system environment (i.e the operating system), the physical medium name, the original medium type.

Example:
CED+5+2E::9'

5. Segments Layout

Segment number: 77

SG17	- C	1000 -	PGI-DTM-QTY-ALI-FTX-SG18-SG19-SG20-SG21-SG27-SG30-SG31-SG32-SG33-SG34-SG35-SG36
SG34	- C	99 -	EFI-CED-COM-RFF-DTM-QTY
COM	- C	9 -	Communication contact

Function:

To identify a communication number of a department or a person to whom communication should be directed.

		EDIFACT	GS1	*	Description
C076	COMMUNICATION CONTACT	M	**M**		
3148	Communication address identifier	M an..512	**M**		
3155	Communication address code qualifier	M an..3	**M**		AO = Uniform Resource Location (URL) IA = Interchange address (GS1 Temporary Code)

Segment Notes:

This segment is used to identify the communication address where the external object is to be found.

Example:
COM+www.ean-int.org/pictures:WWW'

5. Segments Layout

Segment number: 78

SG17	- C	1000 -	PGI-DTM-QTY-ALI-FTX-SG18-SG19-SG20-SG21-SG27-SG30-SG31-SG32-SG33-SG34-SG35-SG36
SG34	- C	99 -	EFI-CED-COM-RFF-DTM-QTY
RFF	- C	9 -	Reference

Function:

To specify a reference.

		EDIFACT	GS1	*	Description
C506	REFERENCE	M	**M**		
1153	Reference code qualifier	M an..3	**M**		AXQ = Product specification reference number PL = Price list number
1154	Reference identifier	C an..70	**O**		
1156	Document line identifier	C an..6	**O**		
4000	Reference version identifier	C an..35	**N**		
1060	Revision identifier	C an..6	**N**		

Segment Notes:

This segment is used to identify any other EANCOM message to which the external object is linked.

Example:
RFF+PL::28'

5. Segments Layout

Segment number: 79

SG17	- C	1000 -	PGI-DTM-QTY-ALI-FTX-SG18-SG19-SG20-SG21-SG27-SG30-SG31-SG32-SG33-SG34-SG35-SG36
SG34	- C	99 -	EFI-CED-COM-RFF-DTM-QTY
DTM	- C	9 -	Date/time/period

Function:

To specify date, and/or time, or period.

		EDIFACT	GS1	*	Description
C507	DATE/TIME/PERIOD	M	**M**		
2005	Date or time or period function code qualifier	M an..3	**M**		706 = File generation date and/or time
2380	Date or time or period value	C an..35	**R**		
2379	Date or time or period format code	C an..3	**R**		203 = CCYYMMDDHHMM

Segment Notes:

This segment is used to indicate the date/time on which the external object was generated.

Example:
DTM+706:200205021200:203'

5. Segments Layout

Segment number: 80

SG17	- C	1000 -	PGI-DTM-QTY-ALI-FTX-SG18-SG19-SG20-SG21-SG27-SG30-SG31-SG32-SG33-SG34-SG35-SG36
SG34	- C	99 -	EFI-CED-COM-RFF-DTM-QTY
QTY	- C	9 -	Quantity

Function:

To specify a pertinent quantity.

		EDIFACT	GS1	*	Description
C186	QUANTITY DETAILS	M	**M**		
6063	Quantity type code qualifier	M an..3	**M**		399 = File size before compression 400 = File size after compression
6060	Quantity	M an..35	**M**		
6411	Measurement unit code	C an..3	**R**		

Segment Notes:

This segment is used to identify the size/volume of the external object identified in the EFI segment.

Example:
QTY+399:12:KB'

5. Segments Layout

Segment number: 81

SG17	- C	1000	-	PGI-DTM-QTY-ALI-FTX-SG18-SG19-SG20-SG21-SG27-SG30-SG31-SG32-SG33-SG34-SG35-SG36
SG35	- C	9	-	TRU-DTM
TRU	- M	1	-	Technical rules

Function:

A segment specifying technical rules.

		EDIFACT	GS1	*	Description
7402	Object identifier	M an..35	**M**		
1056	Version identifier	C an..9	**O**		
1058	Release identifier	C an..9	**O**		
7175	Rule part identifier	C an..7	**O**		
3055	Code list responsible agency code	C an..3	**O**		5 = ISO (International Organization for Standardization)

Segment Notes:

This segment is used to specify any technical rules which relate to the product group.

Example:
TRU+9001+2+1+4+5'
Part 4 of the technical rule 9001, version 2, release 1, issued by ISO.

5. Segments Layout

Segment number: 82

SG17	- C	1000 -	PGI-DTM-QTY-ALI-FTX-SG18-SG19-SG20-SG21-SG27-SG30-SG31-SG32-SG33-SG34-SG35-SG36
SG35	- C	9 -	TRU-DTM
DTM	- C	9 -	Date/time/period

Function:

To specify date, and/or time, or period.

		EDIFACT	GS1	*	Description
C507	DATE/TIME/PERIOD	M	**M**		
2005	Date or time or period function code qualifier	M an..3	**M**		261 = Release date/time
2380	Date or time or period value	C an..35	**R**		
2379	Date or time or period format code	C an..3	**R**		102 = CCYYMMDD 203 = CCYYMMDDHHMM

Segment Notes:

This segment is used to specify the release date of the technical rules given in the previous TRU segment.

Example:
DTM+261:20020810:102'

5. Segments Layout

Segment number: 83

SG17	- C	1000 -	PGI-DTM-QTY-ALI-FTX-SG18-SG19-SG20-SG21-SG27-SG30-SG31-SG32-SG33-SG34-SG35-SG36
SG36	- C	999999 -	LIN-PIA-IMD-MEA-QTY-HAN-ALI-DTM-RFF-LOC-FTX-SG37-SG38-SG40-SG41-SG47-SG48-SG51-SG52-SG54-SG55-SG56
LIN	- M	1 -	Line item

Function:

To identify a line item and configuration.

		EDIFACT	GS1	*	Description
1082	Line item identifier	C an..6	**R**		Application generated number of the lines or sub-lines within the Price/Sales Catalogue message.
1229	Action request/notification description code	C an..3	**A**	*	1 = Added 2 = Deleted 3 = Changed 4 = No action 10 = Not found 23 = Proposed amendment 38 = Replaced 74 = Reopened 96 = Correction of error 115 = Prior addition The code value '10, Not found' is used when the message responds to a previous PRICAT message. This code is used to indicate that the trade item number included in the PRICAT could not be found on the product data base of the party receiving the PRICAT message.
C212	ITEM NUMBER IDENTIFICATION	C	**D**		This composite will only be used for the identification of GS1 numbers. If another coding structure is required, e.g. HIBC, then this composite will not be used and the code will be detailed in the PIA segment.
7140	Item identifier	C an..35	**R**		Format n..14 GTIN - this is the number of the article.
7143	Item type identification code	C an..3	**R**	*	SRV = GS1 Global Trade Item Number
1131	Code list identification code	C an..17	**N**		
3055	Code list responsible agency code	C an..3	**N**		
C829	SUB-LINE INFORMATION	C	**D**		
5495	Sub-line indicator code	C an..3	**R**	*	1 = Sub-line information
1082	Line item identifier	C an..6	**R**		
1222	Configuration level number	C n..2	**N**		
7083	Configuration operation code	C an..3	**N**		

Segment Notes:

This segment is used to identify the GTIN of a product.
If Global Trade Item Numbers are available it is mandatory to use GTIN within the LIN segment.

Note on DE 1082:
Numbering rule: In Part I, section 4.10 there is the recommendation “Within EANCOM® it is recommended that the line numbers used in the first occurrence of data element 1082 in the LIN segment be sequential, starting at 1 for each new message.”

Note on DE 7140:

5. Segments Layout

Segment number: 83

Only the following significant digits are possible:
- 8 digits for GTIN 8 codes
- 12 digits for GTIN 12 codes
- 13 digits for GTIN 13 codes
- 14 digits for GTIN 14 codes

Dependency Note:
C829 is only used when sub-lines are required.
FOR A COMPLETE DESCRIPTION ON THE USAGE OF SUB-LINES PLEASE REFER TO PART I, SECTION 4.10.

Example:
LIN+1+4+5412345111115:SRV'

5. Segments Layout

Segment number: 84

SG17	- C	1000 -	PGI-DTM-QTY-ALI-FTX-SG18-SG19-SG20-SG21-SG27-SG30-SG31-SG32-SG33-SG34-SG35-SG36
SG36	- C	999999 -	LIN-PIA-IMD-MEA-QTY-HAN-ALI-DTM-RFF-LOC-FTX-SG37-SG38-SG40-SG41-SG47-SG48-SG51-SG52-SG54-SG55-SG56
PIA	- C	99 -	Additional product id

Function:

To specify additional or substitutional item identification codes.

		EDIFACT	GS1	*	Description
4347	Product identifier code qualifier	M an..3	**M**	*	1 = Additional identification 2 = Identification for potential substitution 3 = Substituted by 4 = Substituted for 5 = Product identification 13 = Non-promotional item 14 = Must buy product in multi-buy promotions 15 = Discount product in multi-buy promotions 16 = Deletion of additional identification or identification for substitution 91 = Execution rule target (GS1 Temporary Code) 93 = Execution rule action (GS1 Temporary Code) X1 = No substitution accepted (GS1 Temporary Code) Product Id function, coded has the following restricted coded functions: 1 - Additional Identification - To provide an additional identity for the GTIN identified in the LIN segment, or the non-GTIN provided in the PIA segment using code value '5' in DE 4347. The additional code can consist of: A supplemental identification which provides more information complementary to the GTIN provided in the PIA segment, e.g., a batch number, promotional variant number, grouping code, etc. An alternative identification which may be used instead of the GTIN provided in the PIA segment, e.g., a buyer's article number, an HIBC code, etc. 2 - Identification for Substitution - To provide the GTIN of a product which can substitute the product identified by the primary product identification (either in LIN or PIA) when the latter is temporarily unavailable, e.g., a similar or identical product coded with a different GTIN (article coded in a different country), a different size unit of the same product, a similar product with for example a different brand name. 3 - Substituted by - To provide the GTIN of a product which has substituted the product identified by the number in the LIN segment. In the Price/Sales Catalogue this function code may be used to inform trading partners of a number change relevant to a product. In this case, the LIN segment will contain the old trade item number and the 'Substituted by' PIA segment, the new trade item

5. Segments Layout

Segment number: 84

		EDIFACT	GS1	*	Description
					number. 4 - Substituted for - To provide the gloabl trade item number of a product which has been substituted for the product identified by the GTIN provided in the LIN segment. In the Price/Sales Catalogue this function code may be used to inform trading partners of an number change relevant to a product. In this case, the LIN segment will contain the new number and the 'Substituted for' PIA segment will identify the old trade item number which has been substituted. 5 - Product Identification - To provide the primary product identification code when no GTIN has been provided in the LIN segment. GTINs should not be used in conjunction with this code value. It should be noted that when this code is used the product code specified here is the code which should be used for ordering and invoicing purposes. 14 and 15: These codes are used in a complex promotion environment to indicate the product(s) which must be bought to qualify for a promotion and the products against which discounts are being offered. 16 - Deletion of additional identification or identification for substitution - Code indicating the deletion of an additional or substitute product identification. X1 - No substitution accepted - The buyer will not accept any other product code than the one specified in the LIN segment. The code specified in the LIN segment is repeated in the PIA segment to confirm the only code acceptable.
C212	ITEM NUMBER IDENTIFICATION	M	**M**		
7140	Item identifier	C an..35	**R**		
7143	Item type identification code	C an..3	**R**		ATC = Therapeutic classification number (GS1 Temporary Code) AQ = Coupon number BRI = Brick Code (GS1 Temporary Code) GAT = GPC Brick attribute type (GS1 Temporary Code) GAV = GPC brick attribute value (GS1 Temporary Code) GU = Supplier's internal article group number/product classification code (GS1 Temporary Code) IN = Buyer's item number PV = Promotional variant number SA = Supplier's article number SPP = Standard product also used in promotions (GS1 Temporary Code) STB = Japanese classification system JICFS STC = European Union dairy subsidy eligibility classification SSS = Distributor's article identifier STD = GS1 Spain Classification SRS = RSK number

5. Segments Layout

Segment number: 84

		EDIFACT	GS1	*	Description
					SRV = GS1 Global Trade Item Number SST = Norwegian Classification system ENVA SSU = Supplier assigned SSV = Mexican classification system AMECE SSW = German classification system CCG SSY = Canadian classification system ICC SSZ = Dutch classification system CBL X10 = Lottery game number (GS1 Temporary Code) X11 = Lottery pack book number (GS1 Temporary Code) X12 = NABCA product code (GS1 Temporary Code)
1131	Code list identification code	C an..17	**O**		
3055	Code list responsible agency code	C an..3	**D**		9 = GS1 60 = Assigned by national trade agency 91 = Assigned by supplier or supplier's agent 92 = Assigned by buyer or buyer's agent 295 = AU, Therapeutic Goods Administration
C212	ITEM NUMBER IDENTIFICATION	C	**O**		
7140	Item identifier	C an..35	**R**		
7143	Item type identification code	C an..3	**R**		
1131	Code list identification code	C an..17	**O**		
3055	Code list responsible agency code	C an..3	**D**		
C212	ITEM NUMBER IDENTIFICATION	C	**O**		
7140	Item identifier	C an..35	**R**		
7143	Item type identification code	C an..3	**R**		
1131	Code list identification code	C an..17	**O**		
3055	Code list responsible agency code	C an..3	**D**		
C212	ITEM NUMBER IDENTIFICATION	C	**O**		
7140	Item identifier	C an..35	**R**		
7143	Item type identification code	C an..3	**R**		
1131	Code list identification code	C an..17	**O**		
3055	Code list responsible agency code	C an..3	**D**		
C212	ITEM NUMBER IDENTIFICATION	C	**O**		
7140	Item identifier	C an..35	**R**		
7143	Item type identification code	C an..3	**R**		
1131	Code list identification code	C an..17	**O**		
3055	Code list responsible agency code	C an..3	**D**		

5. Segments Layout

Segment number: 84

Segment Notes:

This segment is used to identify additional or substitutional item identification codes such as buyer's, or seller's item number.

Example:
PIA+1+AX87655:IV'
In this example the PIA segment is used to provide an additional identification to the number provided in the 'Product Identification' PIA segment. This GTIN 5410738251028 refers to the buyer's internal part number AX87655.

PIA+2+5412345111184:SRV'
In this example the 'Identification for Substitution' PIA segment is used to provide a GTIN identification for substitution. The product identified in the 'Product Identification' PIA segment by the GTIN 5410738251028 can be substituted by the product identified in the current PIA segment by the GTIN 5412345111184 in case the former is not available.

PIA+3+5412345111184:SRV'
In this example the 'Substituted By' PIA segment is used to identify a number which is replacing the current primary GTIN. The current number is identified in the 'Product Identification' PIA segment.

PIA+4+5410738251028:SRV'
In this example the 'Substituted For' PIA segment is used to provide the number of the product which is being substituted for the former primary GTIN. The new code 5412345111184 would be included in the message in the 'Product Identification' PIA segment.

PIA+5+51028:SA'
In this example the PIA segment is used to identify the non-GS1 primary product code.

PIA+16+INTRLCDE:SA'
In this example the PIA segment is used to delete additional identification of a product, in this case the supplier code INTRLCDE.

PIA+X1+5412345111115:SRV'
This example details the situation where the buyer explicitly specifies that no other product is acceptable but the one specified in the LIN segment. The PIA re-specifies the product code from the LIN segment.
PIA+1+1000000003:XY7::9'
PIA+1+1000000003:XY8::9'
PIA+1+1000000003:XY9::9'
PIA+1+1000000003:XZ0::9'
PIA+1+1000000003:XZ1::9'
PIA+1+1000000003:XZ2::9'
PIA+1+1000000003:XZ3::9'
PIA+1+1000000003:XZ4::9'

5. Segments Layout

Segment number: 85

SG17	- C	1000 -	PGI-DTM-QTY-ALI-FTX-SG18-SG19-SG20-SG21-SG27-SG30-SG31-SG32-SG33-SG34-SG35-SG36
SG36	- C	999999 -	LIN-PIA-IMD-MEA-QTY-HAN-ALI-DTM-RFF-LOC-FTX-SG37-SG38-SG40-SG41-SG47-SG48-SG51-SG52-SG54-SG55-SG56
IMD	- C	999 -	Item description

Function:

To describe an item in either an industry or free format.

		EDIFACT	GS1	*	Description
7077	Description format code	C an..3	**R**	*	A = Free-form long description B = Code and text C = Code (from industry code list) D = Free-form price look up E = Free-form short description F = Free-form S = Structured (from industry code list) This DE qualifies the type of description as: free-form, free form long, free form short or free form PLU. The actual text descriptions are provided in one or more occurrences of DE 7008.
C272	ITEM CHARACTERISTIC	C	**O**		
7081	Item characteristic code	C an..3	**R**		2 = General product form 35 = Colour 44 = Further identifying characteristic 87 = Promotional event 120 = Chemistry 126 = Pattern 132 = Fabric 223 = Brand name ANM = Article name (GS1 Temporary Code) DSC = Description (GS1 Temporary Code) MNF = Manufacturer (GS1 Temporary Code) OFS = Order Fulfilment Strategy (GS1 Temporary Code) TDS = Technical description (GS1 Temporary Code) TPE = Article type (GS1 Temporary Code) U02 = Fiber (GS1 Temporary Code) UQ2 = Orchestra (GS1 Temporary Code) UQ3 = Conductor (GS1 Temporary Code) If coded colour descriptions are required the actual colour code is provided in DE 7009 followed by the codes relevant agency responsible for the maintenance of the colour codes provided in DE 3055. If more than one description format needs to be provided, e.g., free-form short and free form PLU text, it is recommended that all description formats in one language be provided before commencing descriptions in another language.
1131	Code list identification code	C an..17	**O**		
3055	Code list responsible agency code	C an..3	**D**	*	9 = GS1 376 = PANTONE Must be used if DE7081 contains an GS1 Code.
C273	ITEM DESCRIPTION	C	**A**		

5. Segments Layout

Segment number: 85

	EDIFACT	GS1	*	Description
7009 Item description code	C an..17	**O**		BLK = Bulk consumer unit (GS1 Permanent Code) BU = Base unit (GS1 Permanent Code) CTO = Cut to order (GS1 Permanent Code) CU = Consumer unit (GS1 Permanent Code) D = Available all the year round (GS1 Permanent Code) DST = Display stand (GS1 Permanent Code) DU = Despatch unit (GS1 Permanent Code) ETO = Engineer to Order (GS1 Permanent Code) FS = Available in spring-summer (GS1 Permanent Code) HN = Handling unit (GS1 Permanent Code) HW = Available in autumn-winter (GS1 Permanent Code) IT = Intermediate unit (GS1 Permanent Code) MOD = Model (GS1 Permanent Code) MTO = Make to Order (GS1 Permanent Code) MTS = Make to Stock (GS1 Permanent Code) NAR = Next Article (GS1 Permanent Code) NCU = Not a consumer unit (GS1 Permanent Code) NDU = Not a despatch unit (GS1 Permanent Code) NFR = Not For Resale (GS1 Permanent Code) NIN = Not an invoicing unit (GS1 Permanent Code) NLK = Not a bulk consumer unit (GS1 Permanent Code) NO = Not an ordering unit (GS1 Permanent Code) NOS = Yes, NOS item (GS1 Permanent Code) NOT = Not, not an NOS item (GS1 Permanent Code) NPC = Reusable container, but not standardized by a pool cooperative (GS1 Permanent Code) NRE = Not a retail product (GS1 Permanent Code) NS = Not smallest unit (GS1 Permanent Code) NVQ = Not a variable quantity product (GS1 Permanent Code) ORU = Ordering unit (GS1 Permanent Code) PR1 = Bonus Pack (GS1 Permanent Code) PR2 = Free components (GS1 Permanent Code) PR3 = Free quantity (GS1 Permanent Code) PR4 = Multi-pack and combination pack (GS1 Permanent Code) PRO = Programme (GS1 Permanent Code) RD = Refundable deposit item (GS1 Permanent Code) RE = Retail product (GS1 Permanent Code) RPC = Reusable pool container (GS1 Permanent Code)	

5. Segments Layout

Segment number: 85

		EDIFACT	GS1	*	Description
					SG = Standard group of products (mixed assortment) (GS1 Permanent Code) SU = Smallest unit (GS1 Permanent Code) TU = Traded unit (GS1 Permanent Code) VQ = Variable quantity product (GS1 Permanent Code) XX8 = Fixed discount coupon on item price (GS1 Permanent Code) XX9 = Fixed discount coupon on purchase amount (GS1 Permanent Code) XY1 = Percentage discount on item price (GS1 Permanent Code) XY2 = Percentage discount on purchase amount (GS1 Permanent Code) XY3 = Meal voucher (GS1 Permanent Code)
1131	Code list identification code	C an..17	**O**		
3055	Code list responsible agency code	C an..3	**D**		9 = GS1
7008	Item description	C an..256	**O**		
7008	Item description	C an..256	**O**		
3453	Language name code	C an..3	**O**		
7383	Surface or layer code	C an..3	**N**		

Segment Notes:

This segment is used to describe the current line item.
Product description information is required in the price catalogue message when a product is new or its description has been amended, otherwise its use is not recommended.
If you wish to indicate that promotional details are marked on the package, then this should be indicated in DE 7233 in the PAC segment.

Example:
IMD+C++TU::9'
IMD+F++:::CORN CRISPIES:CASE'

5. Segments Layout

Segment number: 86

SG17	- C	1000 -	PGI-DTM-QTY-ALI-FTX-SG18-SG19-SG20-SG21-SG27-SG30-SG31-SG32-SG33-SG34-SG35-SG36
SG36	- C	999999 -	LIN-PIA-IMD-MEA-QTY-HAN-ALI-DTM-RFF-LOC-FTX-SG37-SG38-SG40-SG41-SG47-SG48-SG51-SG52-SG54-SG55-SG56
MEA	- C	10 -	Measurements

Function:

To specify physical measurements, including dimension tolerances, weights and counts.

		EDIFACT	GS1	*	Description
6311	Measurement purpose code qualifier	M an..3	**M**		ABO = Comparison price measurement PD = Physical dimensions (product ordered) SO = Storage limitation
C502	MEASUREMENT DETAILS	C	**A**		
6313	Measured attribute code	C an..3	**A**		AAA = Unit net weight AAJ = Number of units per pallet ABJ = Volume ABK = Angle AEI = Drained weight BUP = Number of base units per pallet (GS1 Temporary Code) CF1 = Colony forming Unit (GS1 Temporary Code) CT = Contents of package DLL = Diluted liquid (GS1 Temporary Code) HT = Height dimension NPL = Number of layers per pallet (GS1 Temporary Code) RA = Relative humidity TC = Temperature WD = Width dimension The code value 'NPL' is used to indicate the total number of units on a pallet by multiplying the number of units per layer by the number of layers on a pallet.
6321	Measurement significance code	C an..3	**O**		3 = Approximately 4 = Equal to
6155	Non-discrete measurement name code	C an..17	**O**		42 = Uncontrolled temperature 43 = Chilled 44 = Frozen 45 = Temperature controlled
6154	Non-discrete measurement name	C an..70	**N**		
C174	VALUE/RANGE	C	**A**		
6411	Measurement unit code	M an..3	**M**		AV = capsule EV = envelope H87 = Piece ST = sheet CF2 = Colony forming unit per gram (GS1 Temporary Code) DRG = Dragée (GS1 Temporary Code) UI = Unit of activity, predefined (GS1 Temporary Code) PTN = Portion (GS1 Temporary Code)
6314	Measurement value	C an..18	**O**		
6162	Range minimum value	C n..18	**O**		

5. Segments Layout

Segment number: 86

		EDIFACT	GS1	*	Description
6152	Range maximum value	C n..18	**O**		
6432	Significant digits quantity	C n..2	**N**		
7383	Surface or layer code	C an..3	**N**		

Segment Notes:

This segment is used to specify measurements related to the article identified in the LIN segment. Measurements related to the packaging of the article are provided in the MEA segment of the PAC segment group.

Examples:
1. Physical Dimensions of a product without packaging (500mm x 200mm x 100mm)
MEA+PD+HT+MMT:500'
MEA+PD+LN+MMT:200'
MEA+PD+WD+MMT:100'

2. Storage Temperature between 10 and 15 degrees celsius
MEA+SO+TC+CEL::10:15'

3. The volume of the product is 100 millilitres.
MEA+PD+ABJ+MLT:100'

4. The net weight of the unit is equal to 250 kilograms.
MEA+PD+AAA:4+KGM:250'

5. Segments Layout

Segment number: 87

SG17	- C	1000 -	PGI-DTM-QTY-ALI-FTX-SG18-SG19-SG20-SG21-SG27-SG30-SG31-SG32-SG33-SG34-SG35-SG36
SG36	- C	999999 -	LIN-PIA-IMD-MEA-QTY-HAN-ALI-DTM-RFF-LOC-FTX-SG37-SG38-SG40-SG41-SG47-SG48-SG51-SG52-SG54-SG55-SG56
QTY	- C	10 -	Quantity

Function:

To specify a pertinent quantity.

		EDIFACT	GS1	*	Description
C186	QUANTITY DETAILS	M	**M**		
6063	Quantity type code qualifier	M an..3	**M**		164 = Delivery batch 53 = Minimum order quantity 54 = Maximum order quantity 129 = Units per unit price 193 = Free quantity included 200 = Free quantity not included 251 = Incremental order quantity 504 = Number of wash loads 507 = Free quantity basis 17E = Number of units in lower packaging or configuration level (GS1 Temporary Code) 45E = Number of units in higher packaging or configuration level (GS1 Temporary Code) The code value '17E' is used to indicate the total quantity of sub-line items contained in the main line (looking down the hierarchy). Code value '45E' is used to indicate the quantity of a sub-line item contained in the main line (looking up the hierarchy). The sum of the quantities for code value '45E' for all sub-lines should equal the value for code value '17E' for the main line.
6060	Quantity	M an..35	**M**		
6411	Measurement unit code	C an..3	**D**		This DE is only used if the product being identified is of variable quantity.

Segment Notes:

This segment is used to provide quantity information for the current line item, e.g. minimum order quantity.

Example:
QTY+53:120'

5. Segments Layout

Segment number: 88

SG17	- C	1000 -	PGI-DTM-QTY-ALI-FTX-SG18-SG19-SG20-SG21-SG27-SG30-SG31-SG32-SG33-SG34-SG35-SG36
SG36	- C	999999 -	LIN-PIA-IMD-MEA-QTY-HAN-ALI-DTM-RFF-LOC-FTX-SG37-SG38-SG40-SG41-SG47-SG48-SG51-SG52-SG54-SG55-SG56
HAN	- C	5 -	Handling instructions

Function:

To specify handling and where necessary, notify hazards.

		EDIFACT	GS1	*	Description
C524	HANDLING INSTRUCTIONS	C	**A**		
4079	Handling instruction description code	C an..3	**R**		3 = Stacked 14 = Keep frozen 17 = Keep in a lying position 23 = Transit or cross docking delivery request 25 = Keep in upright/standing position BIG = Outsized (GS1 Temporary Code) CRU = Crushable (GS1 Temporary Code) DAE = Dangerous article (GS1 Temporary Code) EAT = Foodstuffs (GS1 Temporary Code) FAC = Factory package (GS1 Temporary Code) FTD = Frost danger (GS1 Temporary Code) HWC = Handle with care (GS1 Temporary Code) MF = Multiple facings (GS1 Temporary Code) NES = Nestable (GS1 Temporary Code) NSD = Nesting depth (GS1 Temporary Code) NSH = Nesting height (GS1 Temporary Code) NSW = Nesting width (GS1 Temporary Code) PSC = Pest controlling (GS1 Temporary Code) SSN = Smell sensitive (GS1 Temporary Code) STR = Stacking restricted (GS1 Temporary Code) UST = Unstackable (GS1 Temporary Code)
1131	Code list identification code	C an..17	**O**		
3055	Code list responsible agency code	C an..3	**D**		2 = CEC (Commission of the European Communities) 9 = GS1 This data element must be used when not using UN/EDIFACT codes in data element 4079, e.g., HWC, STR, etc.
4078	Handling instruction description	C an..70	**O**		
C218	HAZARDOUS MATERIAL	C	**O**		
7419	Hazardous material category name code	C an..7	**D**		The preferred way to provide 'ADR international classification' or 'Hazardous material standard text' is to use DE 1131. Used to provide the material class code of an organization.
1131	Code list identification code	C an..17	**O**		ADR = Accord Europeen au transport international dangereuses (GS1 Temporary Code) HMT = Hazardous material standard text (GS1

5. Segments Layout

Segment number: 88

		EDIFACT	GS1	*	Description
					Temporary Code)
3055	Code list responsible agency code	C an..3	**D**		9 = GS1
7418	Hazardous material category name	C an..35	**O**		To be used when no code value is available for DE7419.

Segment Notes:

This segment is used to specify any handling instructions for the current line item. Handling instructions related to the packaging of the product are provided in the HAN segment of the PAC segment group.

Example:
HAN+EAT::9'

5. Segments Layout

Segment number: 89

SG17	- C	1000 -	PGI-DTM-QTY-ALI-FTX-SG18-SG19-SG20-SG21-SG27-SG30-SG31-SG32-SG33-SG34-SG35-SG36
SG36	- C	999999 -	LIN-PIA-IMD-MEA-QTY-HAN-ALI-DTM-RFF-LOC-FTX-SG37-SG38-SG40-SG41-SG47-SG48-SG51-SG52-SG54-SG55-SG56
ALI	- C	5 -	Additional information

Function:

To indicate that special conditions due to the origin, customs preference, fiscal or commercial factors are applicable.

		EDIFACT	GS1	*	Description
3239	Country of origin name code	C an..3	**O**		ISO 3166 two alpha code
9213	Duty regime type code	C an..3	**O**		
4183	Special condition code	C an..3	**O**		6 = Subject to bonus 109 = Sale or return 116 = Subject to postponed discount 123 = Pharmacy sales only 124 = Sale requires medical prescription 125 = New item, not yet available 126 = New, available 177 = Product irradiated for preservation 201 = Ingredient is irradiated not applicable 202 = Raw material is irradiated not applicable 203 = Trade item is genetically modified not applicable 204 = Ingredient is irradiated not applicable 205 = Size dependent pricing 206 = Size independent pricing 74E = Subject to special rules for hazardous materials (GS1 Temporary Code) 75E = Not subject to special rules for hazardous materials (GS1 Temporary Code) 94E = Deletion, announcement only (GS1 Temporary Code) 95E = Temporary product (GS1 Temporary Code) 96E = Product again available (GS1 Temporary Code) X61 = Is reload (GS1 Temporary Code) X62 = Is not reload (GS1 Temporary Code)
4183	Special condition code	C an..3	**O**		
4183	Special condition code	C an..3	**O**		
4183	Special condition code	C an..3	**O**		
4183	Special condition code	C an..3	**O**		

Segment Notes:

This segment is used to indicate special conditions for the current line item, or, to specify the country of origin of the line item.

Example:
ALI+EU'

5. Segments Layout

Segment number: 90

SG17	- C	1000 -	PGI-DTM-QTY-ALI-FTX-SG18-SG19-SG20-SG21-SG27-SG30-SG31-SG32-SG33-SG34-SG35-SG36
SG36	- C	999999 -	LIN-PIA-IMD-MEA-QTY-HAN-ALI-DTM-RFF-LOC-FTX-SG37-SG38-SG40-SG41-SG47-SG48-SG51-SG52-SG54-SG55-SG56
DTM	- C	10 -	Date/time/period

Function:

To specify date, and/or time, or period.

		EDIFACT	GS1	*	Description
C507	DATE/TIME/PERIOD	M	**M**		
2005	Date or time or period function code qualifier	M an..3	**M**		169 = Lead time 273 = Validity period 321 = Promotion date/period 360 = Sell by date 361 = Best before date 362 = End availability date 363 = Total shelf life period 364 = Minimum shelf life remaining at time of despatch period 382 = Earliest sale date 418 = Minimum shelf life remaining at time of receipt 423 = First date of ordering 424 = Last date of ordering 789 = Opened trade item life span 794 = First returnable date/time 795 = Community visibility date/time 41E = Product lifespan from time of production (GS1 Temporary Code)
2380	Date or time or period value	C an..35	**R**		
2379	Date or time or period format code	C an..3	**R**		102 = CCYYMMDD 203 = CCYYMMDDHHMM 715 = YYWW-YYWW 718 = CCYYMMDD-CCYYMMDD 802 = Month 803 = Week 804 = Day 805 = Hour Periods are specified using one repeat of the DTM segment. The qualifier 718 for DE 2379 indicates that the date is in the format CCYYMMDD-CCYYMMDD where the user may specify a start and end date. The start date for a period is always specified first.

Segment Notes:

This segment is used to specify relevant dates for the current line item.

Example:
DTM+321:2002050120020531:718'
The period of the promotion is from the 1st May 2002 until the 31st May 2002.

DTM+169:3:803'
The lead time on the product is 3 weeks.

5. Segments Layout

Segment number: 91

SG17	- C	1000 -	PGI-DTM-QTY-ALI-FTX-SG18-SG19-SG20-SG21-SG27-SG30-SG31-SG32-SG33-SG34-SG35-SG36
SG36	- C	999999 -	LIN-PIA-IMD-MEA-QTY-HAN-ALI-DTM-RFF-LOC-FTX-SG37-SG38-SG40-SG41-SG47-SG48-SG51-SG52-SG54-SG55-SG56
RFF	- C	99 -	Reference

Function:

To specify a reference.

		EDIFACT	GS1	*	Description
C506	REFERENCE	M	**M**		
1153	Reference code qualifier	M an..3	**M**		AAL = Drawing number AWS = Hygienic Certificate number, national
1154	Reference identifier	C an..70	**R**		
1156	Document line identifier	C an..6	**O**		
4000	Reference version identifier	C an..35	**N**		
1060	Revision identifier	C an..6	**N**		

Segment Notes:

This segment is used to identify references, which are related to the current line item.

Example:
RFF+AAL:DRW001'

5. Segments Layout

Segment number: 92

SG17	- C	1000 -	PGI-DTM-QTY-ALI-FTX-SG18-SG19-SG20-SG21-SG27-SG30-SG31-SG32-SG33-SG34-SG35-SG36
SG36	- C	999999 -	LIN-PIA-IMD-MEA-QTY-HAN-ALI-DTM-RFF-LOC-FTX-SG37-SG38-SG40-SG41-SG47-SG48-SG51-SG52-SG54-SG55-SG56
LOC	- C	1 -	Place/location identification

Function:

To identify a place or a location and/or related locations.

		EDIFACT	GS1	*	Description
3227	Location function code qualifier	M an..3	**M**		121 = Country of sale 162 = Place or location of sale 257 = Country of assembly 298 = Country of last processing
C517	LOCATION IDENTIFICATION	C	**A**		
3225	Location name code	C an..25	**A**		GLN - Format n13
1131	Code list identification code	C an..17	**O**		
3055	Code list responsible agency code	C an..3	**D**		9 = GS1 DE 3055 must be used if DE 3225 is used and does not contain an UN/LOCODE.
3224	Location name	C an..256	**O**		
C519	RELATED LOCATION ONE IDENTIFICATION	C	**N**		
3223	First related location name code	C an..25			
1131	Code list identification code	C an..17			
3055	Code list responsible agency code	C an..3			
3222	First related location name	C an..70			
C553	RELATED LOCATION TWO IDENTIFICATION	C	**N**		
3233	Second related location name code	C an..25			
1131	Code list identification code	C an..17			
3055	Code list responsible agency code	C an..3			
3232	Second related location name	C an..70			
5479	Relation code	C an..3	**N**		

Segment Notes:

This segment is used to indicate the country, the continent or the region where the product may be sold. This segment should only be used to identify countries other than the 'country of origin', e.g. country of export. The country of origin should continue to be stated in the ALI segment of the message.

Example:
LOC+121+4012345500004::9'

5. Segments Layout

Segment number: 93

SG17	- C	1000 -	PGI-DTM-QTY-ALI-FTX-SG18-SG19-SG20-SG21-SG27-SG30-SG31-SG32-SG33-SG34-SG35-SG36
SG36	- C	999999 -	LIN-PIA-IMD-MEA-QTY-HAN-ALI-DTM-RFF-LOC-FTX-SG37-SG38-SG40-SG41-SG47-SG48-SG51-SG52-SG54-SG55-SG56
FTX	- C	999 -	Free text

Function:

To provide free form or coded text information.

		EDIFACT	GS1	*	Description
4451	Text subject code qualifier	M an..3	**M**		ACL = Quality Statement Code AEI = Instructions to the applicant AGZ = Marketing activities BLY = Product ingredients PRD = Product information PKG = Packaging information ZZZ = Mutually defined
4453	Free text function code	C an..3	**A**	*	1 = Text for subsequent use
C107	TEXT REFERENCE	C	**D**		This composite is only used when trading partners have agreed to use mutually defined code values.
4441	Free text value code	M an..17	**M**		
1131	Code list identification code	C an..17	**O**		
3055	Code list responsible agency code	C an..3	**D**		91 = Assigned by supplier or supplier's agent 92 = Assigned by buyer or buyer's agent
C108	TEXT LITERAL	C	**D**		This composite is only used if coded text can not be used.
4440	Free text value	M an..512	**M**		
4440	Free text value	C an..512	**O**		
4440	Free text value	C an..512	**O**		
4440	Free text value	C an..512	**O**		
4440	Free text value	C an..512	**O**		
3453	Language name code	C an..3	**D**		ISO 639 two alpha code This data element is only used when non coded free text has been provided in data element C108.
4447	Free text format code	C an..3	**N**		

Segment Notes:

This segment is used to provide any free text information related to the current line item.
Use of this segment in free form is not recommended since it inhibits automatic processing of the Price/Sales Catalogue. Coded references to standard texts is an available functionality which enables automatic processing and reduces transmission overheads. Standard texts should be mutually defined among trading partners and can be used to cover legal and other requirements.

Example:
FTX+ZZZ+1+003::91'
(e.g., Standard Text Code 003 = 'Special christmas range now available.')

5. Segments Layout

Segment number: 94

SG17	- C	1000 -	PGI-DTM-QTY-ALI-FTX-SG18-SG19-SG20-SG21-SG27-SG30-SG31-SG32-SG33-SG34-SG35-SG36
SG36	- C	999999 -	LIN-PIA-IMD-MEA-QTY-HAN-ALI-DTM-RFF-LOC-FTX-SG37-SG38-SG40-SG41-SG47-SG48-SG51-SG52-SG54-SG55-SG56
SG37	- C	999 -	CCI-CAV-MEA
CCI	- M	1 -	Characteristic/class id

Function:

To identify and describe a specific characteristic and its relevance for subsequent business processes.

		EDIFACT	GS1	*	Description
7059	Class type code	C an..3	**O**		11 = Product
C502	MEASUREMENT DETAILS	C	**N**		
6313	Measured attribute code	C an..3	**O**		
6321	Measurement significance code	C an..3			
6155	Non-discrete measurement name code	C an..17			
6154	Non-discrete measurement name	C an..70			
C240	PRODUCT CHARACTERISTIC	C	**O**		
7037	Characteristic description code	M an..17	**M**		This data element is used to identify the characteristics of a line item in user coded form. As no EDIFACT code list exists for this data element codes should be from the EANCOM code list or be allocated depending on the requirements of the user. Should it not be possible to provide a user code in this data element and a free form characteristic description is used in data element 7036, then it is recommended that the code value 'ZZZ' be put in data element 7037 (which is mandatory). ORGANIC = Organic Trade Item Code (GS1 Permanent Code) PACKMAT = Packaging Material (GS1 Permanent Code) UOM = Ordering and Selling Unit of Measure (GS1 Permanent Code)
1131	Code list identification code	C an..17	**O**		
3055	Code list responsible agency code	C an..3	**D**		9 = GS1 60 = Assigned by national trade agency 91 = Assigned by supplier or supplier's agent 92 = Assigned by buyer or buyer's agent
7036	Characteristic description	C an..35	**O**		This data element is used to provide free form text characteristics for use where no coded values exist in data element 7037.
7036	Characteristic description	C an..35	**O**		
4051	Characteristic relevance code	C an..3	**C**		

Segment Notes:

This segment is used to specify the characteristics of the current line item.

Example:

5. Segments Layout

Segment number: 94

CCI+11++ZZZ::91:FABRIC' This example indicates for the textile industry that the product characteristic being identified is for fabric. As no code value is available (code ZZZ is a dummy because DE 7037 is mandatory) the information is provided in free text form.

5. Segments Layout

Segment number: 95

SG17	- C	1000 -	PGI-DTM-QTY-ALI-FTX-SG18-SG19-SG20-SG21-SG27-SG30-SG31-SG32-SG33-SG34-SG35-SG36
SG36	- C	999999 -	LIN-PIA-IMD-MEA-QTY-HAN-ALI-DTM-RFF-LOC-FTX-SG37-SG38-SG40-SG41-SG47-SG48-SG51-SG52-SG54-SG55-SG56
SG37	- C	999 -	CCI-CAV-MEA
CAV	- C	10 -	Characteristic value

Function:

To provide the value of a characteristic.

		EDIFACT	GS1	*	Description
C889	CHARACTERISTIC VALUE	M	**M**		
7111	Characteristic value description code	C an..3	**A**		This data element is used to provide characteristic values. As no EDIFACT code list exists for this data element codes should be allocated depending on the requirements of the user. 1 = Chest/bust width 2 = Hip width 3 = Outside leg length
1131	Code list identification code	C an..17	**O**		
3055	Code list responsible agency code	C an..3	**D**		9 = GS1 60 = Assigned by national trade agency 91 = Assigned by supplier or supplier's agent 92 = Assigned by buyer or buyer's agent 174 = DE, DIN (Deutsches Institut fuer Normung)
7110	Characteristic value description	C an..35	**O**		RIGHTRET5 = FULL (GS1 Permanent Code) RIGHTRET6 = PARTIAL (GS1 Permanent Code)
7110	Characteristic value description	C an..35	**O**		

Segment Notes:

This segment is used to further specify product characteristics for the current line item.

Example:
CAV+:::WOOL'
When using in combination with the example in the previous CCI indicates that the fabric used in the product is wool. As no code value exist within the industry the free text description is used.
CAV+CHE:SZ:9'
Size type is chest bust
CAV+HIP:SZ:9'
Size type is HIPS.
CAV+OLG:SZ:9'
Size type is Outside Leg.
CAV+EU:SZ:9'
CAV+:::RIGHTRET5'
The return goods policy is Full.
CAV+:::RIGHTRET6'
The return goods policy is Partial.

5. Segments Layout

Segment number: 96

SG17	- C	1000 -	PGI-DTM-QTY-ALI-FTX-SG18-SG19-SG20-SG21-SG27-SG30-SG31-SG32-SG33-SG34-SG35-SG36
SG36	- C	999999 -	LIN-PIA-IMD-MEA-QTY-HAN-ALI-DTM-RFF-LOC-FTX-SG37-SG38-SG40-SG41-SG47-SG48-SG51-SG52-SG54-SG55-SG56
SG37	- C	999 -	CCI-CAV-MEA
MEA	- C	10 -	Measurements

Function:

To specify physical measurements, including dimension tolerances, weights and counts.

		EDIFACT	GS1	*	Description
6311	Measurement purpose code qualifier	M an..3	**M**		PD = Physical dimensions (product ordered) SV = Specification value
C502	MEASUREMENT DETAILS	C	**O**		
6313	Measured attribute code	C an..3	**A**		AAA = Unit net weight CF1 = Colony forming Unit (GS1 Temporary Code) DI = Diameter DP = Depth HT = Height dimension LN = Length dimension TH = Thickness
6321	Measurement significance code	C an..3	**O**		3 = Approximately 4 = Equal to
6155	Non-discrete measurement name code	C an..17	**O**		
6154	Non-discrete measurement name	C an..70	**N**		
C174	VALUE/RANGE	C	**R**		
6411	Measurement unit code	M an..3	**M**		AV = capsule EV = envelope H87 = Piece ST = sheet CF2 = Colony forming unit per gram (GS1 Temporary Code) DRG = Dragée (GS1 Temporary Code) UI = Unit of activity, predefined (GS1 Temporary Code) PTN = Portion (GS1 Temporary Code)
6314	Measurement value	C an..18	**O**		
6162	Range minimum value	C n..18	**O**		
6152	Range maximum value	C n..18	**O**		
6432	Significant digits quantity	C n..2	**N**		
7383	Surface or layer code	C an..3	**N**		

Segment Notes:

This segment is used to specify any measurements related to the currently identified product characteristic class.

Example:
MEA+SV++P1:15'
This MEA segment indicates the measurements for the specification identified in the CCI and CAV segments. In this instance the ingredient E15 is 15% of the total ingredients for the product.

5. Segments Layout

Segment number: 97

SG17	- C	1000 -	PGI-DTM-QTY-ALI-FTX-SG18-SG19-SG20-SG21-SG27-SG30-SG31-SG32-SG33-SG34-SG35-SG36
SG36	- C	999999 -	LIN-PIA-IMD-MEA-QTY-HAN-ALI-DTM-RFF-LOC-FTX-SG37-SG38-SG40-SG41-SG47-SG48-SG51-SG52-SG54-SG55-SG56
SG38	- C	10 -	TAX-MOA
TAX	- M	1 -	Duty/tax/fee details

Function:

To specify relevant duty/tax/fee information.

		EDIFACT	GS1	*	Description
5283	Duty or tax or fee function code qualifier	M an..3	**M**		5 = Customs duty 7 = Tax
C241	DUTY/TAX/FEE TYPE	C	**D**		Tax types and categories will vary from country to country. They are to be defined by national guidelines.
5153	Duty or tax or fee type name code	C an..3	**O**		AAD = Tobacco tax ENV = Environmental tax GST = Goods and services tax VAT = Value added tax
1131	Code list identification code	C an..17	**O**		
3055	Code list responsible agency code	C an..3	**D**		9 = GS1
5152	Duty or tax or fee type name	C an..35	**O**		
C533	DUTY/TAX/FEE ACCOUNT DETAIL	C	**O**		
5289	Duty or tax or fee account code	M an..6	**M**		
1131	Code list identification code	C an..17	**O**		
3055	Code list responsible agency code	C an..3	**D**		
5286	Duty or tax or fee assessment basis value	C an..15	**O**		
C243	DUTY/TAX/FEE DETAIL	C	**A**		
5279	Duty or tax or fee rate code	C an..7	**O**		
1131	Code list identification code	C an..17	**O**		
3055	Code list responsible agency code	C an..3	**D**		
5278	Duty or tax or fee rate	C an..17	**R**		The actual rate of tax/duty.
5273	Duty or tax or fee rate basis code	C an..12	**O**		
1131	Code list identification code	C an..17	**O**		
3055	Code list responsible agency code	C an..3	**D**		
5305	Duty or tax or fee category code	C an..3	**D**		A = Mixed tax rate AA = Lower Rate C = Duty paid by supplier E = Exempt from tax S = Standard rate Tax types and categories will vary from country to country. They are to be defined by national guidelines.

5. Segments Layout

Segment number: 97

		EDIFACT	GS1	*	Description
3446	Party tax identifier	C an..20	**O**		
1227	Calculation sequence code	C an..3	**N**		

Segment Notes:

This segment is used to specify the tax details for the current line item.

Example:
TAX+7+VAT+++:::21+S'

5. Segments Layout

Segment number: 98

SG17	- C	1000 -	PGI-DTM-QTY-ALI-FTX-SG18-SG19-SG20-SG21-SG27-SG30-SG31-SG32-SG33-SG34-SG35-SG36
SG36	- C	999999 -	LIN-PIA-IMD-MEA-QTY-HAN-ALI-DTM-RFF-LOC-FTX-SG37-SG38-SG40-SG41-SG47-SG48-SG51-SG52-SG54-SG55-SG56
SG38	- C	10 -	TAX-MOA
MOA	- C	1 -	Monetary amount

Function:

To specify a monetary amount.

		EDIFACT	GS1	*	Description
C516	MONETARY AMOUNT	M	**M**		
5025	Monetary amount type code qualifier	M an..3	**M**		124 = Tax amount 125 = Taxable amount
5004	Monetary amount	C n..35	**R**		
6345	Currency identification code	C an..3	**C**		
6343	Currency type code qualifier	C an..3	**C**		
4405	Status description code	C an..3	**N**		

Segment Notes:

This segment is used to indicate any monetary amounts related to the previous TAX segment.

Example:
MOA+124:342'

5. Segments Layout

Segment number: 99

SG17	- C	1000 -	PGI-DTM-QTY-ALI-FTX-SG18-SG19-SG20-SG21-SG27-SG30-SG31-SG32-SG33-SG34-SG35-SG36
SG36	- C	999999 -	LIN-PIA-IMD-MEA-QTY-HAN-ALI-DTM-RFF-LOC-FTX-SG37-SG38-SG40-SG41-SG47-SG48-SG51-SG52-SG54-SG55-SG56
SG40	- C	100 -	PRI-CUX-APR-RNG-DTM-LOC
PRI	- M	1 -	Price details

Function:

To specify price information.

		EDIFACT	GS1	*	Description
C509	PRICE INFORMATION	C	**R**		
5125	Price code qualifier	M an..3	**M**		AAA = Calculation net AAB = Calculation gross AAE = Information price, excluding allowances or charges, including taxes AAF = Information price, excluding allowances or charges and taxes INF = Information AAA - The price stated is the net price including all allowances and charges and excluding taxes. Allowances and charges may be stated for information purposes only. AAB - The price stated is the gross price excluding all allowances, charges and taxes. Allowances and charges must be stated and used for net calculation purposes. INF - The price stated is provided for information purposes only AAH = Subject to escalation and price adjustment AAQ = Firm price ABL = Base price ABM = Base price difference Use the codes AAH, AAQ, ABL, ABM when dealing with CSA (customer specific articles).
5118	Price amount	C n..15	**A**		
5375	Price type code	C an..3	**O**		AE = Range dependent price CA = Catalogue CT = Contract Code value AE should only be used with the RNG segment in the PRI group 40.
5387	Price specification code	C an..3	**O**		AAB = Price includes tax ABH = Statutory minimum retail price ACA = Agreed minimum retail price ACB = Marked retail price LIU = List price (GS1 Temporary Code) PRP = Promotional price
5284	Unit price basis value	C n..9	**D**		
6411	Measurement unit code	C an..3	**D**		
5213	Sub-line item price change operation code	C an..3	**N**		

Segment Notes:

This segment is used to provide price information for the current line item.

5. Segments Layout

Segment number: 99

Example:
PRI+AAA:600:CA'

Dependency Notes:
Data elements 5284 and 6411 are used when a product is a variable quantity product, e.g. price per 200 kilos, or when the unit of measure for purchasing, delivery, and invoicing are different for a product, e.g. sugar is not a variable quantity product but ordered and delivered in packs, and invoiced in kilos or tonnes.

5. Segments Layout

Segment number: 100

SG17	- C	1000 -	PGI-DTM-QTY-ALI-FTX-SG18-SG19-SG20-SG21-SG27-SG30-SG31-SG32-SG33-SG34-SG35-SG36
SG36	- C	999999 -	LIN-PIA-IMD-MEA-QTY-HAN-ALI-DTM-RFF-LOC-FTX-SG37-SG38-SG40-SG41-SG47-SG48-SG51-SG52-SG54-SG55-SG56
SG40	- C	100 -	PRI-CUX-APR-RNG-DTM-LOC
CUX	- C	1 -	Currencies

Function:

To specify currencies used in the transaction and relevant details for the rate of exchange.

		EDIFACT	GS1	*	Description
C504	CURRENCY DETAILS	C	**R**		
6347	Currency usage code qualifier	M an..3	**M**	*	2 = Reference currency
6345	Currency identification code	C an..3	**R**		ISO 4217 three alpha.
6343	Currency type code qualifier	C an..3	**R**	*	8 = Price list currency 11 = Payment currency
6348	Currency rate value	C n..4	**N**		
C504	CURRENCY DETAILS	C	**D**		The second occurrence of this composite is only used if a target currency is being specified.
6347	Currency usage code qualifier	M an..3	**M**	*	3 = Target currency
6345	Currency identification code	C an..3	**R**		ISO 4217 three alpha.
6343	Currency type code qualifier	C an..3	**R**	*	8 = Price list currency 11 = Payment currency
6348	Currency rate value	C n..4	**O**		
5402	Currency exchange rate	C n..12	**D**		The rate of exchange which applies between the reference and the target currency. The rate of exchange is only used if a target currency has been identified in the second occurrence of C504.
6341	Exchange rate currency market identifier	C an..3	**N**		

Segment Notes:

This segment is used to provide currency information for the current line item.
The CUX segment is mandatory for international exchanges.
When specifying Reference and Target Currencies, one occurrence of CUX is all that is required. The reference currency is identified in the first occurrence of the composite C504, with the target currency specified in the second occurrence of C504. The rate of exchange between the two is detailed in DE 5402.
The general rule for calculating rate of exchange is as follows:
Reference Currency multiplied by Rate = Target Currency.

Example:
Where only the price list currency needs to be identified for national trade.
CUX+2:EUR:8'

CUX+2:EUR:8+3:USD:11+0.90243'

5. Segments Layout

Segment number: 101

SG17	- C	1000 -	PGI-DTM-QTY-ALI-FTX-SG18-SG19-SG20-SG21-SG27-SG30-SG31-SG32-SG33-SG34-SG35-SG36
SG36	- C	999999 -	LIN-PIA-IMD-MEA-QTY-HAN-ALI-DTM-RFF-LOC-FTX-SG37-SG38-SG40-SG41-SG47-SG48-SG51-SG52-SG54-SG55-SG56
SG40	- C	100 -	PRI-CUX-APR-RNG-DTM-LOC
APR	- C	99 -	Additional price information

Function:

To provide information concerning pricing related to class of trade, price multiplier, and reason for change.

		EDIFACT	GS1	*	Description
4043	Trade class code	C an..3	**D**	*	DI = Distributor MF = Manufacturer RS = Resale WH = Wholesaler WT = Out patient WU = In patient Code value 'MF' is only used if no price has been provided in DE 5118 of the PRI. It is used to indicate the source of the price when held externally by the manufacturer.
C138	PRICE MULTIPLIER INFORMATION	C	**N**		
5394	Price multiplier rate	M n..12			
5393	Price multiplier type code qualifier	C an..3			
C960	REASON FOR CHANGE	C	**A**		
4295	Change reason description code	C an..3	**R**		AA = Member attribute change AC = Member category change AQ = Alternate quantity and unit of measurement
1131	Code list identification code	C an..17	**O**		
3055	Code list responsible agency code	C an..3	**D**		
4294	Change reason description	C an..35	**O**		

Segment Notes:

This segment is used to provide a reason for a change in the price specified in the PRI segment.

Example:
APR+++AA'

5. Segments Layout

Segment number: 102

SG17	- C	1000	-	PGI-DTM-QTY-ALI-FTX-SG18-SG19-SG20-SG21-SG27-SG30-SG31-SG32-SG33-SG34-SG35-SG36
SG36	- C	999999	-	LIN-PIA-IMD-MEA-QTY-HAN-ALI-DTM-RFF-LOC-FTX-SG37-SG38-SG40-SG41-SG47-SG48-SG51-SG52-SG54-SG55-SG56
SG40	- C	100	-	PRI-CUX-APR-RNG-DTM-LOC
RNG	- C	1	-	Range details

Function:

To identify a range.

		EDIFACT	GS1	*	Description
6167	Range type code qualifier	M an..3	**M**		3 = Monetary range 4 = Quantity range 6 = Order quantity range
C280	RANGE	C	**R**		
6411	Measurement unit code	M an..3	**M**		
6162	Range minimum value	C n..18	**O**		
6152	Range maximum value	C n..18	**O**		

Segment Notes:

This segment is used to provide price range details for the current line item.

Example:
RNG+4+KGM:15'

5. Segments Layout

Segment number: 103

SG17	- C	1000 -	PGI-DTM-QTY-ALI-FTX-SG18-SG19-SG20-SG21-SG27-SG30-SG31-SG32-SG33-SG34-SG35-SG36
SG36	- C	999999 -	LIN-PIA-IMD-MEA-QTY-HAN-ALI-DTM-RFF-LOC-FTX-SG37-SG38-SG40-SG41-SG47-SG48-SG51-SG52-SG54-SG55-SG56
SG40	- C	100 -	PRI-CUX-APR-RNG-DTM-LOC
DTM	- C	5 -	Date/time/period

Function:

To specify date, and/or time, or period.

		EDIFACT	GS1	*	Description
C507	DATE/TIME/PERIOD	M	**M**		
2005	Date or time or period function code qualifier	M an..3	**M**	*	194 = Start date/time 206 = End date/time 273 = Validity period
2380	Date or time or period value	C an..35	**R**		
2379	Date or time or period format code	C an..3	**R**		102 = CCYYMMDD 718 = CCYYMMDD-CCYYMMDD

Segment Notes:

This segment is used to identify specific dates and times associated with pricing information.

Example:
DTM+194:20020801:102'
DTM+273:2002011220020331:718'
The validity period of the price is from the 12th of January 2002 to the 31st March 2002.

5. Segments Layout

Segment number: 104

SG17	- C	1000 -	PGI-DTM-QTY-ALI-FTX-SG18-SG19-SG20-SG21-SG27-SG30-SG31-SG32-SG33-SG34-SG35-SG36
SG36	- C	999999 -	LIN-PIA-IMD-MEA-QTY-HAN-ALI-DTM-RFF-LOC-FTX-SG37-SG38-SG40-SG41-SG47-SG48-SG51-SG52-SG54-SG55-SG56
SG40	- C	100 -	PRI-CUX-APR-RNG-DTM-LOC
LOC	- C	99 -	Place/location identification

Function:

To identify a place or a location and/or related locations.

		EDIFACT	GS1	*	Description
3227	Location function code qualifier	M an..3	**M**		7 = Place of delivery 8 = Place of destination 162 = Place or location of sale
C517	LOCATION IDENTIFICATION	C	**R**		
3225	Location name code	C an..25	**R**		GS1 Global Location Number (GLN)- Format n13
1131	Code list identification code	C an..17	**N**		
3055	Code list responsible agency code	C an..3	**D**	*	9 = GS1 DE 3055 must be used if DE 3225 is used and does not contain an UN/LOCODE.
3224	Location name	C an..256	**N**		
C519	RELATED LOCATION ONE IDENTIFICATION	C	**O**		
3223	First related location name code	C an..25	**O**		
1131	Code list identification code	C an..17	**N**		
3055	Code list responsible agency code	C an..3	**O**		ZZZ = Mutually defined
3222	First related location name	C an..70	**N**		
C553	RELATED LOCATION TWO IDENTIFICATION	C	**O**		
3233	Second related location name code	C an..25	**O**		
1131	Code list identification code	C an..17	**N**		
3055	Code list responsible agency code	C an..3	**O**		ZZZ = Mutually defined
3232	Second related location name	C an..70	**N**		
5479	Relation code	C an..3	**N**		

Segment Notes:

This segment is used to indicate the party to which the price applies. The party is identified with an GS1 Global Location Number (GLN). In addition, related locations such as target market, actual point of delivery, ... can be specified.

Example:
LOC+7+4012345500004::9'

5. Segments Layout

Segment number: 105

SG17	- C	1000 -	PGI-DTM-QTY-ALI-FTX-SG18-SG19-SG20-SG21-SG27-SG30-SG31-SG32-SG33-SG34-SG35-SG36
SG36	- C	999999 -	LIN-PIA-IMD-MEA-QTY-HAN-ALI-DTM-RFF-LOC-FTX-SG37-SG38-SG40-SG41-SG47-SG48-SG51-SG52-SG54-SG55-SG56
SG41	- C	99 -	ALC-ALI-DTM-SG42-SG43-SG44-SG45-SG46
ALC	- M	1 -	Allowance or charge

Function:

To identify allowance or charge details.

		EDIFACT	GS1	*	Description
5463	Allowance or charge code qualifier	M an..3	**M**		A = Allowance C = Charge
C552	ALLOWANCE/CHARGE INFORMATION	C	**O**		
1230	Allowance or charge identifier	C an..35	**D**		If code '69' is used in DE 5189, the agreement number must be specified in DE 1230.
5189	Allowance or charge identification code	C an..3	**O**		69 = Charge for a customer specific finish 102 = Fixed long term 103 = Temporary 104 = Standard
4471	Settlement means code	C an..3	**O**		5 = Charge to be paid by vendor 6 = Charge to be paid by customer 38 = Item accruals 39 = Vendor accruals
1227	Calculation sequence code	C an..3	**D**		1 = First step of calculation 2 = Second step of calculation etc, etc, etc..... 9 = Ninth step of calculation The calculation sequence indicator is used when multiple allowances and/or charges are applicable. If various allowances and/or charges percentages, quantities, monetary amounts or rates are applicable to the same base price, then the calculation sequence indicator will always equal one. If the various allowances and/or charges are applied against a fluctuating price (constantly changing because of the application of other allowances and/or charges) then the sequence of calculation is indicated using this data element. When multiple allowances and/or charges are being used a separate occurrence of segment group 41 should be used for each type, i.e., MOA, PCD, etc. If the allowance or charge is not to be applied against a fixed price then the calculation sequence indicator must be included.
C214	SPECIAL SERVICES IDENTIFICATION	C	**D**		This composite is only included if the supplier knows the type of allowance or charge.
7161	Special service description code	C an..3	**R**		ABZ = Miscellaneous rebate or discount ACZ = Damaged merchandise CAU = Sorting CAW = Product Take Back Fee DDA = Dealer discount/allowance (GS1 Temporary Code) DBD = Debtor bound (GS1 Temporary Code)

5. Segments Layout

Segment number: 105

		EDIFACT	GS1	*	Description
					FR = Flat Rate (GS1 Temporary Code) RCH = Return handling (GS1 Temporary Code) TD = Trade discount X01 = Allowance Global (GS1 Temporary Code) X02 = Charge Global (GS1 Temporary Code) X03 = Consolidated (GS1 Temporary Code) X04 = Lump sum (GS1 Temporary Code) X05 = Markup for small volume purchases (GS1 Temporary Code) X30 = Point of sales allowance (GS1 Temporary Code)
1131	Code list identification code	C an..17	**N**		
3055	Code list responsible agency code	C an..3	**D**	*	9 = GS1 This data element is only used if GS1 Codes are used in data element 7161.
7160	Special service description	C an..35	**O**		
7160	Special service description	C an..35	**O**		

Segment Notes:

This segment is used to specify any allowances or charges which are applicable to the current line item. Allowances and/or Charges specified in the ALC segment are only for information purposes if a net price has been specified in DE 5152 of the PRI segment. If a gross price has been specified in DE 5152 of PRI, then the Allowances and/or Charges specified can be used in future transactions, e.g., Orders and Invoices, to calculate the net price.

Example:
ALC+A+++1'

5. Segments Layout

Segment number: 106

SG17	- C	1000 -	PGI-DTM-QTY-ALI-FTX-SG18-SG19-SG20-SG21-SG27-SG30-SG31-SG32-SG33-SG34-SG35-SG36
SG36	- C	999999 -	LIN-PIA-IMD-MEA-QTY-HAN-ALI-DTM-RFF-LOC-FTX-SG37-SG38-SG40-SG41-SG47-SG48-SG51-SG52-SG54-SG55-SG56
SG41	- C	99 -	ALC-ALI-DTM-SG42-SG43-SG44-SG45-SG46
ALI	- C	5 -	Additional information

Function:

To indicate that special conditions due to the origin, customs preference, fiscal or commercial factors are applicable.

		EDIFACT	GS1	*	Description
3239	Country of origin name code	C an..3	**O**		Use ISO 3166 2 alpha code
9213	Duty regime type code	C an..3	**O**		
4183	Special condition code	C an..3	**O**		6 = Subject to bonus 109 = Sale or return 116 = Subject to postponed discount 123 = Pharmacy sales only 124 = Sale requires medical prescription 125 = New item, not yet available 126 = New, available 177 = Product irradiated for preservation 201 = Ingredient is irradiated not applicable 202 = Raw material is irradiated not applicable 203 = Trade item is genetically modified not applicable 204 = Ingredient is irradiated not applicable 205 = Size dependent pricing 206 = Size independent pricing 74E = Subject to special rules for hazardous materials (GS1 Temporary Code) 75E = Not subject to special rules for hazardous materials (GS1 Temporary Code) 94E = Deletion, announcement only (GS1 Temporary Code) 95E = Temporary product (GS1 Temporary Code) 96E = Product again available (GS1 Temporary Code) X61 = Is reload (GS1 Temporary Code) X62 = Is not reload (GS1 Temporary Code)
4183	Special condition code	C an..3	**O**		
4183	Special condition code	C an..3	**O**		
4183	Special condition code	C an..3	**O**		
4183	Special condition code	C an..3	**O**		

Segment Notes:

This segment is used to specify special conditions related to the allowance and/or charge in the ALC segment.

Example:
ALI+++8'

5. Segments Layout

Segment number: 107

SG17	- C	1000 -	PGI-DTM-QTY-ALI-FTX-SG18-SG19-SG20-SG21-SG27-SG30-SG31-SG32-SG33-SG34-SG35-SG36
SG36	- C	999999 -	LIN-PIA-IMD-MEA-QTY-HAN-ALI-DTM-RFF-LOC-FTX-SG37-SG38-SG40-SG41-SG47-SG48-SG51-SG52-SG54-SG55-SG56
SG41	- C	99 -	ALC-ALI-DTM-SG42-SG43-SG44-SG45-SG46
DTM	- C	9 -	Date/time/period

Function:

To specify date, and/or time, or period.

		EDIFACT	GS1	*	Description
C507	DATE/TIME/PERIOD	M	**M**		
2005	Date or time or period function code qualifier	M an..3	**M**		194 = Start date/time 206 = End date/time
2380	Date or time or period value	C an..35	**R**		
2379	Date or time or period format code	C an..3	**R**		102 = CCYYMMDD 203 = CCYYMMDDHHMM

Segment Notes:

This segment is used to indicate any dates related to the allowances/charges information specified in the ALC segment.

Example:
DTM+194:20021101:102'
DTM+206:20021115:102'
This example indicates that the allowances and/or charges are start on the 1st of November 2002 and finish on the 15th of November 2002.

5. Segments Layout

Segment number: 108

SG17	- C	1000 -	PGI-DTM-QTY-ALI-FTX-SG18-SG19-SG20-SG21-SG27-SG30-SG31-SG32-SG33-SG34-SG35-SG36
SG36	- C	999999 -	LIN-PIA-IMD-MEA-QTY-HAN-ALI-DTM-RFF-LOC-FTX-SG37-SG38-SG40-SG41-SG47-SG48-SG51-SG52-SG54-SG55-SG56
SG41	- C	99 -	ALC-ALI-DTM-SG42-SG43-SG44-SG45-SG46
SG42	- C	10 -	QTY-RNG
QTY	- M	1 -	Quantity

Function:

To specify a pertinent quantity.

		EDIFACT	GS1	*	Description
C186	QUANTITY DETAILS	M	**M**		
6063	Quantity type code qualifier	M an..3	**M**		1 = Discrete quantity
6060	Quantity	M an..35	**M**		
6411	Measurement unit code	C an..3	**D**		This DE is only used if the current product is of variable quantity.

Segment Notes:

This segment is used to specify quantity allowance/charge for the current line item.

Example:
QTY+1:14'

5. Segments Layout

Segment number: 109

SG17	- C	1000	-	PGI-DTM-QTY-ALI-FTX-SG18-SG19-SG20-SG21-SG27-SG30-SG31-SG32-SG33-SG34-SG35-SG36
SG36	- C	999999	-	LIN-PIA-IMD-MEA-QTY-HAN-ALI-DTM-RFF-LOC-FTX-SG37-SG38-SG40-SG41-SG47-SG48-SG51-SG52-SG54-SG55-SG56
SG41	- C	99	-	ALC-ALI-DTM-SG42-SG43-SG44-SG45-SG46
SG42	- C	10	-	QTY-RNG
RNG	- C	1	-	Range details

Function:

To identify a range.

		EDIFACT	GS1	*	Description
6167	Range type code qualifier	M an..3	**M**		1 = Allowance range 2 = Charge range
C280	RANGE	C	**R**		
6411	Measurement unit code	M an..3	**M**		
6162	Range minimum value	C n..18	**O**		
6152	Range maximum value	C n..18	**O**		

Segment Notes:

This segment is used to specify ranges which apply to the preceding QTY segment.

Example:
RNG+1+KGM:15:55'
The allowance indicated in the previous QTY segment will become effective for quantities between 15 and 55 kilograms.

5. Segments Layout

Segment number: 110

SG17	- C	1000 -	PGI-DTM-QTY-ALI-FTX-SG18-SG19-SG20-SG21-SG27-SG30-SG31-SG32-SG33-SG34-SG35-SG36
SG36	- C	999999 -	LIN-PIA-IMD-MEA-QTY-HAN-ALI-DTM-RFF-LOC-FTX-SG37-SG38-SG40-SG41-SG47-SG48-SG51-SG52-SG54-SG55-SG56
SG41	- C	99 -	ALC-ALI-DTM-SG42-SG43-SG44-SG45-SG46
SG43	- C	99 -	PCD-RNG
PCD	- M	1 -	Percentage details

Function:

To specify percentage information.

		EDIFACT	GS1	*	Description
C501	PERCENTAGE DETAILS	M	**M**		
5245	Percentage type code qualifier	M an..3	**M**		12 = Discount
5482	Percentage	C n..10	**R**		
5249	Percentage basis identification code	C an..3	**O**		
1131	Code list identification code	C an..17	**O**		
3055	Code list responsible agency code	C an..3	**D**		
4405	Status description code	C an..3	**N**		

Segment Notes:

This segment is used to specify percentage allowance/charges for the current line item.

Example:
PCD+12:1.25:1'
1.25 % per unit discount

5. Segments Layout

Segment number: 111

SG17	- C	1000 -	PGI-DTM-QTY-ALI-FTX-SG18-SG19-SG20-SG21-SG27-SG30-SG31-SG32-SG33-SG34-SG35-SG36
SG36	- C	999999 -	LIN-PIA-IMD-MEA-QTY-HAN-ALI-DTM-RFF-LOC-FTX-SG37-SG38-SG40-SG41-SG47-SG48-SG51-SG52-SG54-SG55-SG56
SG41	- C	99 -	ALC-ALI-DTM-SG42-SG43-SG44-SG45-SG46
SG43	- C	99 -	PCD-RNG
RNG	- C	1 -	Range details

Function:

To identify a range.

		EDIFACT	GS1	*	Description
6167	Range type code qualifier	M an..3	**M**		1 = Allowance range 2 = Charge range
C280	RANGE	C	**R**		
6411	Measurement unit code	M an..3	**M**		
6162	Range minimum value	C n..18	**O**		
6152	Range maximum value	C n..18	**O**		

Segment Notes:

This segment is used to specify ranges which apply to the preceding PCD segment.

Example:
RNG+2+KGM:250:500'
The charge indicated in the previous PCD segment will become effective for quantities between 250 and 500 kilograms.

5. Segments Layout

Segment number: 112

SG17	- C	1000 -	PGI-DTM-QTY-ALI-FTX-SG18-SG19-SG20-SG21-SG27-SG30-SG31-SG32-SG33-SG34-SG35-SG36
SG36	- C	999999 -	LIN-PIA-IMD-MEA-QTY-HAN-ALI-DTM-RFF-LOC-FTX-SG37-SG38-SG40-SG41-SG47-SG48-SG51-SG52-SG54-SG55-SG56
SG41	- C	99 -	ALC-ALI-DTM-SG42-SG43-SG44-SG45-SG46
SG44	- C	10 -	MOA-RNG
MOA	- M	1 -	Monetary amount

Function:

To specify a monetary amount.

		EDIFACT	GS1	*	Description
C516	MONETARY AMOUNT	M	**M**		
5025	Monetary amount type code qualifier	M an..3	**M**		23 = Charge amount 83 = Lumpsum 204 = Allowance amount
5004	Monetary amount	C n..35	**R**		
6345	Currency identification code	C an..3	**O**		
6343	Currency type code qualifier	C an..3	**O**		
4405	Status description code	C an..3	**O**		

Segment Notes:

This segment is used to specify monetary charges or discounts for the current line item.

Example:
MOA+23:500'

5. Segments Layout

Segment number: 113

SG17	- C	1000 -	PGI-DTM-QTY-ALI-FTX-SG18-SG19-SG20-SG21-SG27-SG30-SG31-SG32-SG33-SG34-SG35-SG36
SG36	- C	999999 -	LIN-PIA-IMD-MEA-QTY-HAN-ALI-DTM-RFF-LOC-FTX-SG37-SG38-SG40-SG41-SG47-SG48-SG51-SG52-SG54-SG55-SG56
SG41	- C	99 -	ALC-ALI-DTM-SG42-SG43-SG44-SG45-SG46
SG44	- C	10 -	MOA-RNG
RNG	- C	1 -	Range details

Function:

To identify a range.

		EDIFACT	GS1	*	Description
6167	Range type code qualifier	M an..3	**M**		1 = Allowance range 2 = Charge range
C280	RANGE	C	**R**		
6411	Measurement unit code	M an..3	**M**		
6162	Range minimum value	C n..18	**O**		
6152	Range maximum value	C n..18	**O**		

Segment Notes:

This segment is used to specify ranges which apply to the preceding MOA segment.

Example:
RNG+3+KGM:650:1200'
The allowance or charge indicated in the previous MOA segment will become effective for quantities between 650 and 1200 kilograms.

5. Segments Layout

Segment number: 114

SG17	- C	1000 -	PGI-DTM-QTY-ALI-FTX-SG18-SG19-SG20-SG21-SG27-SG30-SG31-SG32-SG33-SG34-SG35-SG36
SG36	- C	999999 -	LIN-PIA-IMD-MEA-QTY-HAN-ALI-DTM-RFF-LOC-FTX-SG37-SG38-SG40-SG41-SG47-SG48-SG51-SG52-SG54-SG55-SG56
SG41	- C	99 -	ALC-ALI-DTM-SG42-SG43-SG44-SG45-SG46
SG45	- C	10 -	RTE-RNG
RTE	- M	1 -	Rate details

Function:

To specify rate information.

		EDIFACT	GS1	*	Description
C128	RATE DETAILS	M	**M**		
5419	Rate type code qualifier	M an..3	**M**		1 = Allowance rate 2 = Charge rate
5420	Unit price basis rate	M n..15	**M**		
5284	Unit price basis value	C n..9	**A**		
6411	Measurement unit code	C an..3	**O**		
4405	Status description code	C an..3	**N**		

Segment Notes:

This segment is used to specify rate charge/allowance information for the current line item.

Example:
RTE+2:5.5'

5. Segments Layout

Segment number: 115

SG17	- C	1000	-	PGI-DTM-QTY-ALI-FTX-SG18-SG19-SG20-SG21-SG27-SG30-SG31-SG32-SG33-SG34-SG35-SG36
SG36	- C	999999	-	LIN-PIA-IMD-MEA-QTY-HAN-ALI-DTM-RFF-LOC-FTX-SG37-SG38-SG40-SG41-SG47-SG48-SG51-SG52-SG54-SG55-SG56
SG41	- C	99	-	ALC-ALI-DTM-SG42-SG43-SG44-SG45-SG46
SG45	- C	10	-	RTE-RNG
RNG	- C	1	-	Range details

Function:

To identify a range.

		EDIFACT	GS1	*	Description
6167	Range type code qualifier	M an..3	**M**		1 = Allowance range 2 = Charge range
C280	RANGE	C	**R**		
6411	Measurement unit code	M an..3	**M**		
6162	Range minimum value	C n..18	**O**		
6152	Range maximum value	C n..18	**O**		

Segment Notes:

This segment is used to specify ranges which apply to the preceding RTE segment.

Example:
RNG+1+KGM:650:1200'
The allowance indicated in the previous RTE segment will become effective for quantities between 650 and 1200 kilograms.

5. Segments Layout

Segment number: 116

SG17	- C	1000 -	PGI-DTM-QTY-ALI-FTX-SG18-SG19-SG20-SG21-SG27-SG30-SG31-SG32-SG33-SG34-SG35-SG36
SG36	- C	999999 -	LIN-PIA-IMD-MEA-QTY-HAN-ALI-DTM-RFF-LOC-FTX-SG37-SG38-SG40-SG41-SG47-SG48-SG51-SG52-SG54-SG55-SG56
SG41	- C	99 -	ALC-ALI-DTM-SG42-SG43-SG44-SG45-SG46
SG46	- C	5 -	TAX-MOA
TAX	- M	1 -	Duty/tax/fee details

Function:

To specify relevant duty/tax/fee information.

		EDIFACT	GS1	*	Description
5283	Duty or tax or fee function code qualifier	M an..3	**M**		5 = Customs duty 6 = Fee
C241	DUTY/TAX/FEE TYPE	C	**D**		Tax types and categories will vary from country to country. They are to be defined by national guidelines.
5153	Duty or tax or fee type name code	C an..3	**O**		ENV = Environmental tax GST = Goods and services tax VAT = Value added tax
1131	Code list identification code	C an..17	**O**		
3055	Code list responsible agency code	C an..3	**D**		
5152	Duty or tax or fee type name	C an..35	**O**		
C533	DUTY/TAX/FEE ACCOUNT DETAIL	C	**O**		
5289	Duty or tax or fee account code	M an..6	**M**		
1131	Code list identification code	C an..17	**O**		
3055	Code list responsible agency code	C an..3	**D**		
5286	Duty or tax or fee assessment basis value	C an..15	**O**		
C243	DUTY/TAX/FEE DETAIL	C	**A**		
5279	Duty or tax or fee rate code	C an..7	**O**		
1131	Code list identification code	C an..17	**O**		
3055	Code list responsible agency code	C an..3	**D**		
5278	Duty or tax or fee rate	C an..17	**R**		The actual rate of tax/duty.
5273	Duty or tax or fee rate basis code	C an..12	**O**		
1131	Code list identification code	C an..17	**O**		
3055	Code list responsible agency code	C an..3	**D**		
5305	Duty or tax or fee category code	C an..3	**D**		A = Mixed tax rate E = Exempt from tax S = Standard rate Tax types and categories will vary from country to country. They are to be defined by national guidelines.
3446	Party tax identifier	C an..20	**O**		

5. Segments Layout

Segment number: 116

	EDIFACT	GS1	*	Description
1227 Calculation sequence code	C an..3	**N**		

Segment Notes:

This segment is used to identify any taxes or duties which are due on the allowances or charges which have been specified for the current line item.

Example:
TAX+7+VAT+++:::21+S'

5. Segments Layout

Segment number: 117

SG17	- C	1000 -	PGI-DTM-QTY-ALI-FTX-SG18-SG19-SG20-SG21-SG27-SG30-SG31-SG32-SG33-SG34-SG35-SG36
SG36	- C	999999 -	LIN-PIA-IMD-MEA-QTY-HAN-ALI-DTM-RFF-LOC-FTX-SG37-SG38-SG40-SG41-SG47-SG48-SG51-SG52-SG54-SG55-SG56
SG41	- C	99 -	ALC-ALI-DTM-SG42-SG43-SG44-SG45-SG46
SG46	- C	5 -	TAX-MOA
MOA	- C	1 -	Monetary amount

Function:

To specify a monetary amount.

		EDIFACT	GS1	*	Description
C516	MONETARY AMOUNT	M	**M**		
5025	Monetary amount type code qualifier	M an..3	**M**		124 = Tax amount 125 = Taxable amount
5004	Monetary amount	C n..35	**R**		
6345	Currency identification code	C an..3	**O**		
6343	Currency type code qualifier	C an..3	**N**		
4405	Status description code	C an..3	**N**		

Segment Notes:

This segment is used to specify in monetary terms the amount of tax due for the allowances and charges for the current line item.

Example:
MOA+124:48.90'

5. Segments Layout

Segment number: 118

SG17	- C	1000 -	PGI-DTM-QTY-ALI-FTX-SG18-SG19-SG20-SG21-SG27-SG30-SG31-SG32-SG33-SG34-SG35-SG36
SG36	- C	999999 -	LIN-PIA-IMD-MEA-QTY-HAN-ALI-DTM-RFF-LOC-FTX-SG37-SG38-SG40-SG41-SG47-SG48-SG51-SG52-SG54-SG55-SG56
SG47	- C	999 -	PAC-MEA-HAN
PAC	- M	1 -	Package

Function:

To describe the number and type of packages/physical units.

		EDIFACT	GS1	*	Description
7224	Package quantity	C n..8	**O**		
C531	PACKAGING DETAILS	C	**O**		
7075	Packaging level code	C an..3	**O**		
7233	Packaging related description code	C an..3	**O**		7 = Sell-by date marked on package 8 = Use-by date marked on package 9 = Packaging / manufacturing date marked on package 10 = No freshness date marked on package 31 = Package best before date marked 32 = Package marked recyclable 33 = Package marked returnable 50 = Package barcoded EAN-13 or EAN-8 51 = Package barcoded ITF-14 52 = Package barcoded UCC or EAN-128 54 = Product ingredients marked on package 64 = Package never EPC tagged. 65 = Package sometimes EPC tagged 81 = Package marked with a variable measure barcode 82 = Package marked with fixed measure barcode 80 = Marked with “display until date” LAB = Labeled according to General GS1 Specifications for clothing and fashion accessories (GS1 Temporary Code)
7073	Packaging terms and conditions code	C an..3	**O**		1 = Packaging cost paid by supplier 2 = Packaging cost paid by recipient 3 = Packaging cost not charged (returnable) 29 = Labeled X11 = Packaging recycling fee paid by supplier (GS1 Temporary Code) XX1 = Exchange Pallets (GS1 Temporary Code) XX2 = Return Pallets (GS1 Temporary Code) XX3 = Pallet - Third Party Exchange (GS1 Temporary Code) XX4 = No Exchange / No Return Pallet (GS1 Temporary Code)
C202	PACKAGE TYPE	C	**O**		
7065	Package type description code	C an..17	**A**		BME = Blister pack (GS1 Temporary Code) CBL = Container bottle like (GS1 Temporary Code) FOB = Folding box (GS1 Temporary Code)

5. Segments Layout

Segment number: 118

		EDIFACT	GS1	*	Description
					LAB = Labeled package (GS1 Temporary Code) PLP = Peel pack (GS1 Temporary Code) POP = Cone shaped paper wrapper (GS1 Temporary Code) STL = Stick (GS1 Temporary Code) TEV = Tamper evident package (GS1 Temporary Code) WRP = Wrapper (GS1 Temporary Code)
1131	Code list identification code	C an..17	**O**		
3055	Code list responsible agency code	C an..3	**D**		
7064	Type of packages	C an..35	**O**		
C402	PACKAGE TYPE IDENTIFICATION	C	**N**		
7077	Description format code	M an..3			
7064	Type of packages	M an..35			
7143	Item type identification code	C an..3			
7064	Type of packages	C an..35			
7143	Item type identification code	C an..3			
C532	RETURNABLE PACKAGE DETAILS	C	**D**		Composite C532 is only used where the packaging being described is returnable. This composite identifies who is responsible for the payment of its return.
8395	Returnable package freight payment responsibility code	C an..3	**O**		1 = Paid by customer 3 = Paid by supplier
8393	Returnable package load contents code	C an..3	**N**		

Segment Notes:

This segment is used to describe the packaging for the current line item.

Example:
PAC+++CR++3'

5. Segments Layout

Segment number: 119

SG17	- C	1000 -	PGI-DTM-QTY-ALI-FTX-SG18-SG19-SG20-SG21-SG27-SG30-SG31-SG32-SG33-SG34-SG35-SG36
SG36	- C	999999 -	LIN-PIA-IMD-MEA-QTY-HAN-ALI-DTM-RFF-LOC-FTX-SG37-SG38-SG40-SG41-SG47-SG48-SG51-SG52-SG54-SG55-SG56
SG47	- C	999 -	PAC-MEA-HAN
MEA	- C	10 -	Measurements

Function:

To specify physical measurements, including dimension tolerances, weights and counts.

		EDIFACT	GS1	*	Description
6311	Measurement purpose code qualifier	M an..3	**M**		PD = Physical dimensions (product ordered) SO = Storage limitation TL = Transportation equipment limitations
C502	MEASUREMENT DETAILS	C	**A**		
6313	Measured attribute code	C an..3	**A**		AEA = Loading height AEB = Stacking height ADX = Transport container actual filling weight ADZ = Declared net weight BNX = Number of trade items per pallet layer BNY = Packed items layer Height BNZ = Packing material weight, skin tight covering BRB = Components labelled for recycling percentage BRC = Renewable plastic components percentage, by net weight BRD = Clamp pressure, required HT = Height dimension LAY = Number of layers (GS1 Temporary Code) LN = Length dimension ULY = Number of units per layer (GS1 Temporary Code) WD = Width dimension
6321	Measurement significance code	C an..3	**O**		3 = Approximately 4 = Equal to
6155	Non-discrete measurement name code	C an..17	**N**		
6154	Non-discrete measurement name	C an..70	**N**		
C174	VALUE/RANGE	C	**R**		
6411	Measurement unit code	M an..3	**M**		
6314	Measurement value	C an..18	**O**		
6162	Range minimum value	C n..18	**O**		
6152	Range maximum value	C n..18	**O**		
6432	Significant digits quantity	C n..2	**N**		
7383	Surface or layer code	C an..3	**N**		

Segment Notes:

This segment provides measurement information related to the packaging of the current line item.

Examples:

5. Segments Layout

Segment number: 119

Physical Dimensions of the packaging (600mm x 300mm x 200mm) MEA+PD+HT+MMT:600' MEA+PD+LN+MMT:300' MEA+PD+WD+MMT:200'

5. Segments Layout

Segment number: 120

SG17	- C	1000 -	PGI-DTM-QTY-ALI-FTX-SG18-SG19-SG20-SG21-SG27-SG30-SG31-SG32-SG33-SG34-SG35-SG36
SG36	- C	999999 -	LIN-PIA-IMD-MEA-QTY-HAN-ALI-DTM-RFF-LOC-FTX-SG37-SG38-SG40-SG41-SG47-SG48-SG51-SG52-SG54-SG55-SG56
SG47	- C	999 -	PAC-MEA-HAN
HAN	- C	5 -	Handling instructions

Function:

To specify handling and where necessary, notify hazards.

		EDIFACT	GS1	*	Description
C524	HANDLING INSTRUCTIONS	C	**R**		
4079	Handling instruction description code	C an..3	**R**		3 = Stacked 11 = Refrigeration required 12 = Refrigeration not required 14 = Keep frozen 17 = Keep in a lying position 23 = Transit or cross docking delivery request 25 = Keep in upright/standing position BIG = Outsized (GS1 Temporary Code) CRU = Crushable (GS1 Temporary Code) DAE = Dangerous article (GS1 Temporary Code) EAT = Foodstuffs (GS1 Temporary Code) FAC = Factory package (GS1 Temporary Code) FTD = Frost danger (GS1 Temporary Code) HWC = Handle with care (GS1 Temporary Code) PSC = Pest controlling (GS1 Temporary Code) RFS = Flammable solid (GS1 Temporary Code) SSN = Smell sensitive (GS1 Temporary Code) STR = Stacking restricted (GS1 Temporary Code) UST = Unstackable (GS1 Temporary Code)
1131	Code list identification code	C an..17	**N**		
3055	Code list responsible agency code	C an..3	**D**	*	2 = CEC (Commission of the European Communities) 9 = GS1 This data element must be used when data element 4079 contains a codevalue out of UN/EDIFACT.
4078	Handling instruction description	C an..70	**O**		
C218	HAZARDOUS MATERIAL	C	**O**		
7419	Hazardous material category name code	C an..7	**D**		The preferred way to provide 'ADR international classification' or 'Hazardous material standard text' is to use DE 1131.
1131	Code list identification code	C an..17	**O**		
3055	Code list responsible agency code	C an..3	**D**		
7418	Hazardous material category name	C an..35	**O**		To be used when no code value is available for DE7419.

5. Segments Layout

Segment number: 120

Segment Notes:

This segment is used to specify the handling instructions related to the package identified in the PAC segment.

Example:
HAN+EAT::9'
HAN+HWC::9'

5. Segments Layout

Segment number: 121

SG17	- C	1000 -	PGI-DTM-QTY-ALI-FTX-SG18-SG19-SG20-SG21-SG27-SG30-SG31-SG32-SG33-SG34-SG35-SG36
SG36	- C	999999 -	LIN-PIA-IMD-MEA-QTY-HAN-ALI-DTM-RFF-LOC-FTX-SG37-SG38-SG40-SG41-SG47-SG48-SG51-SG52-SG54-SG55-SG56
SG48	- C	10 -	PAT-DTM-PCD-MOA
PAT	- M	1 -	Payment terms basis

Function:

To specify the payment terms basis.

Notes:
1. This segment will be removed effective with directory D.02B.

		EDIFACT	GS1	*	Description
4279	Payment terms type code qualifier	M an..3	**M**		1 = Basic 3 = Fixed date 7 = Extended 20 = Penalty terms 22 = Discount X10 = Discount after deducting freight (GS1 Temporary Code) X11 = Valuta (GS1 Temporary Code)
C110	PAYMENT TERMS	C	**O**		
4277	Payment terms description identifier	M an..17	**M**		
1131	Code list identification code	C an..17	**N**		
3055	Code list responsible agency code	C an..3	**N**		
4276	Payment terms description	C an..35	**O**		
4276	Payment terms description	C an..35	**O**		
C112	TERMS/TIME INFORMATION	C	**O**		
2475	Time reference code	M an..3	**M**		5 = Date of invoice X10 = Receipt of goods (GS1 Temporary Code)
2009	Terms time relation code	C an..3	**O**		3 = After reference
2151	Period type code	C an..3	**O**		D = Day M = Month WD = Working days Y = Year
2152	Period count quantity	C n..3	**O**		Number of periods for payment.

Segment Notes:

This segment is used by the supplier to specify any specific payment terms applicable the current product.

Example:
The following example indicates basic payment terms with payment due 30 days after the referenced date which is date of invoice.
PAT+1++5:3:D:30'

5. Segments Layout

Segment number: 122

SG17	- C	1000	-	PGI-DTM-QTY-ALI-FTX-SG18-SG19-SG20-SG21-SG27-SG30-SG31-SG32-SG33-SG34-SG35-SG36
SG36	- C	999999	-	LIN-PIA-IMD-MEA-QTY-HAN-ALI-DTM-RFF-LOC-FTX-SG37-SG38-SG40-SG41-SG47-SG48-SG51-SG52-SG54-SG55-SG56
SG48	- C	10	-	PAT-DTM-PCD-MOA
DTM	- C	5	-	Date/time/period

Function:

To specify date, and/or time, or period.

		EDIFACT	GS1	*	Description
C507	DATE/TIME/PERIOD	M	**M**		
2005	Date or time or period function code qualifier	M an..3	**M**		12 = Terms discount due date/time 13 = Terms net due date 273 = Validity period
2380	Date or time or period value	C an..35	**R**		
2379	Date or time or period format code	C an..3	**R**		102 = CCYYMMDD 203 = CCYYMMDDHHMM 718 = CCYYMMDD-CCYYMMDD 110 = DD

Segment Notes:

This segment is used to specify any dates associated with the payment terms.

Example:
Net due date for payment 31st October 2002.
DTM+13:20021031:102'

5. Segments Layout

Segment number: 123

SG17	- C	1000 -	PGI-DTM-QTY-ALI-FTX-SG18-SG19-SG20-SG21-SG27-SG30-SG31-SG32-SG33-SG34-SG35-SG36
SG36	- C	999999 -	LIN-PIA-IMD-MEA-QTY-HAN-ALI-DTM-RFF-LOC-FTX-SG37-SG38-SG40-SG41-SG47-SG48-SG51-SG52-SG54-SG55-SG56
SG48	- C	10 -	PAT-DTM-PCD-MOA
PCD	- C	1 -	Percentage details

Function:

To specify percentage information.

		EDIFACT	GS1	*	Description
C501	PERCENTAGE DETAILS	M	**M**		
5245	Percentage type code qualifier	M an..3	**M**		7 = Percentage of invoice 12 = Discount 15 = Penalty percentage 16 = Interest percentage
5482	Percentage	C n..10	**R**		Actual percentage which must be paid.
5249	Percentage basis identification code	C an..3	**O**		
1131	Code list identification code	C an..17	**O**		
3055	Code list responsible agency code	C an..3	**D**		
4405	Status description code	C an..3	**N**		

Segment Notes:

This segment is used to specify percentages related to the payment terms.

Example:
PCD+12:2.5'

5. Segments Layout

Segment number: 124

SG17	- C	1000 -	PGI-DTM-QTY-ALI-FTX-SG18-SG19-SG20-SG21-SG27-SG30-SG31-SG32-SG33-SG34-SG35-SG36
SG36	- C	999999 -	LIN-PIA-IMD-MEA-QTY-HAN-ALI-DTM-RFF-LOC-FTX-SG37-SG38-SG40-SG41-SG47-SG48-SG51-SG52-SG54-SG55-SG56
SG48	- C	10 -	PAT-DTM-PCD-MOA
MOA	- C	1 -	Monetary amount

Function:

To specify a monetary amount.

		EDIFACT	GS1	*	Description
C516	MONETARY AMOUNT	M	**M**		
5025	Monetary amount type code qualifier	M an..3	**M**		9 = Amount due/amount payable 21 = Cash discount 23 = Charge amount
5004	Monetary amount	C n..35	**R**		
6345	Currency identification code	C an..3	**N**		
6343	Currency type code qualifier	C an..3	**N**		
4405	Status description code	C an..3	**N**		

Segment Notes:

This segment is used to specify monetary amounts related to the payment terms.

Example:
MOA+23:100'

5. Segments Layout

Segment number: 125

SG17	- C	1000 -	PGI-DTM-QTY-ALI-FTX-SG18-SG19-SG20-SG21-SG27-SG30-SG31-SG32-SG33-SG34-SG35-SG36
SG36	- C	999999 -	LIN-PIA-IMD-MEA-QTY-HAN-ALI-DTM-RFF-LOC-FTX-SG37-SG38-SG40-SG41-SG47-SG48-SG51-SG52-SG54-SG55-SG56
SG51	- C	99 -	EFI-CED-COM-RFF-DTM-QTY
EFI	- M	1 -	External file link identification

Function:

To specify the link of one non-EDIFACT external file to an EDIFACT message.

		EDIFACT	GS1	*	Description
C077	FILE IDENTIFICATION	M	**M**		
1508	File name	C an..35	**R**		External Object Identification This data element is used to provide the external object's identification.
7008	Item description	C an..256	**O**		
C099	FILE DETAILS	C	**R**		
1516	File format name	M an..17	**M**		This data element is used to describe the format of the external object. If the object is a computer file the format may be BMP, PCX. If the external object is a video, the format may be SECAM, PAL, etc... If the object is in a physical form such as paper or transparancies, this data element should be filled with "OTHER".
1056	Version identifier	C an..9	**O**		
1503	Data format description code	C an..3	**R**		3 = Binary 4 = Analogue
1502	Data format description	C an..35	**O**		
1050	Sequence position identifier	C an..10	**O**		Sequence number on the physical medium
9450	File compression technique name	C an..35	**N**		

Segment Notes:

This segment is used to identify an external object by indicating its identification, the format, and its sequence number on the physical medium.

Example:
EFI+ECRSTRUC+BMP::3'
The object is a binary file named ECRSTRUC.

5. Segments Layout

Segment number: 126

SG17	- C	1000 -	PGI-DTM-QTY-ALI-FTX-SG18-SG19-SG20-SG21-SG27-SG30-SG31-SG32-SG33-SG34-SG35-SG36
SG36	- C	999999 -	LIN-PIA-IMD-MEA-QTY-HAN-ALI-DTM-RFF-LOC-FTX-SG37-SG38-SG40-SG41-SG47-SG48-SG51-SG52-SG54-SG55-SG56
SG51	- C	99 -	EFI-CED-COM-RFF-DTM-QTY
CED	- C	99 -	Computer environment details

Function:

To give a precise definition of all necessary elements belonging to the configuration of a computer system like hardware, firmware, operating system, communication (VANS, network type, protocol, format) and application software.

		EDIFACT	GS1	*	Description
1501	Computer environment details code qualifier	M an..3	**M**		2 = Operating system 3 = Application software 5 = Sending system
C079	COMPUTER ENVIRONMENT IDENTIFICATION	M	**M**		
1511	Computer environment name code	C an..3	**R**		1E = CD-ROM (GS1 Permanent Code) 2E = Generating software (GS1 Permanent Code) 3E = Compression software (GS1 Permanent Code) 4E = Compression method (GS1 Permanent Code) 5E = Physical medium name (GS1 Permanent Code) 6E = Original medium type (GS1 Permanent Code)
1131	Code list identification code	C an..17	**O**		
3055	Code list responsible agency code	C an..3	**D**		9 = GS1
1510	Computer environment name	C an..35	**A**		
1056	Version identifier	C an..9	**A**		
1058	Release identifier	C an..9	**A**		
7402	Object identifier	C an..35	**N**		
9448	File generation command name	C an..35	**N**		

Segment Notes:

This segment is used to give details of the physical medium used to generate the external object.
This segment can indicate the external object's exchange medium (e.g. a CD-ROM, a diskette, tele-transmission,...), generating environment (i.e. the generating software), compression environment (i.e. the compression software used), compression method, system environment (i.e the operating system), the physical medium name, the original medium type.

Example:
CED+5+2E::9'

5. Segments Layout

Segment number: 127

SG17	- C	1000	-	PGI-DTM-QTY-ALI-FTX-SG18-SG19-SG20-SG21-SG27-SG30-SG31-SG32-SG33-SG34-SG35-SG36
SG36	- C	999999	-	LIN-PIA-IMD-MEA-QTY-HAN-ALI-DTM-RFF-LOC-FTX-SG37-SG38-SG40-SG41-SG47-SG48-SG51-SG52-SG54-SG55-SG56
SG51	- C	99	-	EFI-CED-COM-RFF-DTM-QTY
COM	- C	9	-	Communication contact

Function:

To identify a communication number of a department or a person to whom communication should be directed.

		EDIFACT	GS1	*	Description
C076	COMMUNICATION CONTACT	M	**M**		
3148	Communication address identifier	M an..512	**M**		
3155	Communication address code qualifier	M an..3	**M**		AO = Uniform Resource Location (URL) IA = Interchange address (GS1 Temporary Code)

Segment Notes:

This segment is used to identify the communication address where the external object is to be found.

Example:
COM+www.ean-int.org/pictures:WWW'

5. Segments Layout

Segment number: 128

SG17	- C	1000 -	PGI-DTM-QTY-ALI-FTX-SG18-SG19-SG20-SG21-SG27-SG30-SG31-SG32-SG33-SG34-SG35-SG36
SG36	- C	999999 -	LIN-PIA-IMD-MEA-QTY-HAN-ALI-DTM-RFF-LOC-FTX-SG37-SG38-SG40-SG41-SG47-SG48-SG51-SG52-SG54-SG55-SG56
SG51	- C	99 -	EFI-CED-COM-RFF-DTM-QTY
RFF	- C	9 -	Reference

Function:

To specify a reference.

		EDIFACT	GS1	*	Description
C506	REFERENCE	M	**M**		
1153	Reference code qualifier	M an..3	**M**		PL = Price list number YA1 = Product specification reference number (GS1 Temporary Code)
1154	Reference identifier	C an..70	**O**		
1156	Document line identifier	C an..6	**O**		
4000	Reference version identifier	C an..35	**N**		
1060	Revision identifier	C an..6	**N**		

Segment Notes:

This segment is used to identify any other EANCOM message to which the external object is linked.

Example:
RFF+PL::28'

5. Segments Layout

Segment number: 129

SG17	- C	1000 -	PGI-DTM-QTY-ALI-FTX-SG18-SG19-SG20-SG21-SG27-SG30-SG31-SG32-SG33-SG34-SG35-SG36
SG36	- C	999999 -	LIN-PIA-IMD-MEA-QTY-HAN-ALI-DTM-RFF-LOC-FTX-SG37-SG38-SG40-SG41-SG47-SG48-SG51-SG52-SG54-SG55-SG56
SG51	- C	99 -	EFI-CED-COM-RFF-DTM-QTY
DTM	- C	9 -	Date/time/period

Function:

To specify date, and/or time, or period.

		EDIFACT	GS1	*	Description
C507	DATE/TIME/PERIOD	M	**M**		
2005	Date or time or period function code qualifier	M an..3	**M**		706 = File generation date and/or time
2380	Date or time or period value	C an..35	**R**		
2379	Date or time or period format code	C an..3	**R**		203 = CCYYMMDDHHMM

Segment Notes:

This segment is used to indicate the date/time on which the external object was generated.

Example:
DTM+706:200205021200:203'

5. Segments Layout

Segment number: 130

SG17	- C	1000 -	PGI-DTM-QTY-ALI-FTX-SG18-SG19-SG20-SG21-SG27-SG30-SG31-SG32-SG33-SG34-SG35-SG36
SG36	- C	999999 -	LIN-PIA-IMD-MEA-QTY-HAN-ALI-DTM-RFF-LOC-FTX-SG37-SG38-SG40-SG41-SG47-SG48-SG51-SG52-SG54-SG55-SG56
SG51	- C	99 -	EFI-CED-COM-RFF-DTM-QTY
QTY	- C	9 -	Quantity

Function:

To specify a pertinent quantity.

		EDIFACT	GS1	*	Description
C186	QUANTITY DETAILS	M	**M**		
6063	Quantity type code qualifier	M an..3	**M**		399 = File size before compression 400 = File size after compression
6060	Quantity	M an..35	**M**		
6411	Measurement unit code	C an..3	**R**		

Segment Notes:

This segment is used to identify the size/volume of the external object identified in the EFI segment.

Example:
QTY+399:12:KB'

5. Segments Layout

Segment number: 131

SG17	- C	1000 -	PGI-DTM-QTY-ALI-FTX-SG18-SG19-SG20-SG21-SG27-SG30-SG31-SG32-SG33-SG34-SG35-SG36
SG36	- C	999999 -	LIN-PIA-IMD-MEA-QTY-HAN-ALI-DTM-RFF-LOC-FTX-SG37-SG38-SG40-SG41-SG47-SG48-SG51-SG52-SG54-SG55-SG56
SG52	- C	99 -	NAD-SG53
NAD	- M	1 -	Name and address

Function:

To specify the name/address and their related function, either by C082 only and/or unstructured by C058 or structured by C080 thru 3207.

		EDIFACT	GS1	*	Description
3035	Party function code qualifier	M an..3	**M**		BY = Buyer DES = Brand owner LF = Buyer's corporate office LG = Supplier's corporate office SU = Supplier
C082	PARTY IDENTIFICATION DETAILS	C	**A**		
3039	Party identifier	M an..35	**M**		For identification of parties it is recommended to use GLN - Format n13.
1131	Code list identification code	C an..17	**N**		
3055	Code list responsible agency code	C an..3	**R**		9 = GS1
C058	NAME AND ADDRESS	C	**O**		This composite may only be used to fulfill the requirements of directive 2003/58/EC, article 4.
3124	Name and address description	M an..35	**M**		
3124	Name and address description	C an..35	**O**		
3124	Name and address description	C an..35	**O**		
3124	Name and address description	C an..35	**O**		
3124	Name and address description	C an..35	**O**		
C080	PARTY NAME	C	**D**		
3036	Party name	M an..35	**M**		Party Name in clear text.
3036	Party name	C an..35	**O**		
3036	Party name	C an..35	**O**		
3036	Party name	C an..35	**O**		
3036	Party name	C an..35	**O**		
3045	Party name format code	C an..3	**O**		
C059	STREET	C	**D**		
3042	Street and number or post office box identifier	M an..35	**M**		Building Name/Number and Street
3042	Street and number or post office box identifier	C an..35	**O**		Name and/or P.O. Box
3042	Street and number or post office box identifier	C an..35	**O**		
3042	Street and number or post office box identifier	C an..35	**O**		
3164	City name	C an..35	**D**		City/Town name, clear text.

5. Segments Layout

Segment number: 131

		EDIFACT	GS1	*	Description
C819	COUNTRY SUB-ENTITY DETAILS	C	**D**		
3229	Country sub-entity name code	C an..9	**O**		
1131	Code list identification code	C an..17	**O**		
3055	Code list responsible agency code	C an..3	**O**		
3228	Country sub-entity name	C an..70	**O**		County/State, clear text.
3251	Postal identification code	C an..17	**D**		Postal Code
3207	Country name code	C an..3	**D**		ISO 3166 two alpha code

Segment Notes:

This segment is used to specify names and addresses relevant to the current product.

Example:
NAD+LG+4012345500004::9'

Dependency Notes:
The following composites and data elements are only used when a coded name and address can not be used or there is a requirement to furnish the full name and address of the party identified. The affected composites and data elements are as follows:
C080 - C059 - 3164 - C819 - 3251 - 3207

5. Segments Layout

Segment number: 132

SG17	- C	1000	-	PGI-DTM-QTY-ALI-FTX-SG18-SG19-SG20-SG21-SG27-SG30-SG31-SG32-SG33-SG34-SG35-SG36
SG36	- C	999999	-	LIN-PIA-IMD-MEA-QTY-HAN-ALI-DTM-RFF-LOC-FTX-SG37-SG38-SG40-SG41-SG47-SG48-SG51-SG52-SG54-SG55-SG56
SG52	- C	99	-	NAD-SG53
SG53	- C	99	-	CTA-COM
CTA	- M	1	-	Contact information

Function:

To identify a person or a department to whom communication should be directed.

		EDIFACT	GS1	*	Description
3139	Contact function code	C an..3	**R**		OC = Order contact SA = Sales administration
C056	DEPARTMENT OR EMPLOYEE DETAILS	C	**O**		
3413	Department or employee name code	C an..17	**O**		
3412	Department or employee name	C an..35	**O**		

Segment Notes:

This segment is used to identify the department and person within the party identified in the previous NAD segment.
The Global Location Number GLN - Format n13 - in this segment is particularly suitable for this purpose.

Example:
CTA+OC+:MARK CARTER'
Mr. Mark Carter is the person to contact for purchase orders.

5. Segments Layout

Segment number: 133

SG17	- C	1000 -	PGI-DTM-QTY-ALI-FTX-SG18-SG19-SG20-SG21-SG27-SG30-SG31-SG32-SG33-SG34-SG35-SG36
SG36	- C	999999 -	LIN-PIA-IMD-MEA-QTY-HAN-ALI-DTM-RFF-LOC-FTX-SG37-SG38-SG40-SG41-SG47-SG48-SG51-SG52-SG54-SG55-SG56
SG52	- C	99 -	NAD-SG53
SG53	- C	99 -	CTA-COM
COM	- C	99 -	Communication contact

Function:

To identify a communication number of a department or a person to whom communication should be directed.

		EDIFACT	GS1	*	Description
C076	COMMUNICATION CONTACT	M	**M**		
3148	Communication address identifier	M an..512	**M**		
3155	Communication address code qualifier	M an..3	**M**		AO = Uniform Resource Location (URL) EI = EDI EM = Electronic mail TE = Telephone

Segment Notes:

This segment is used to identify the communications number and the type of communications used for the contact identified in the previous CTA segment.

Example:
COM+00448136533223:TE'

5. Segments Layout

Segment number: 134

SG17	- C	1000 -	PGI-DTM-QTY-ALI-FTX-SG18-SG19-SG20-SG21-SG27-SG30-SG31-SG32-SG33-SG34-SG35-SG36
SG36	- C	999999 -	LIN-PIA-IMD-MEA-QTY-HAN-ALI-DTM-RFF-LOC-FTX-SG37-SG38-SG40-SG41-SG47-SG48-SG51-SG52-SG54-SG55-SG56
SG54	- C	9 -	TRU-DTM
TRU	- M	1 -	Technical rules

Function:

A segment specifying technical rules.

		EDIFACT	GS1	*	Description
7402	Object identifier	M an..35	**M**		
1056	Version identifier	C an..9	**O**		
1058	Release identifier	C an..9	**O**		
7175	Rule part identifier	C an..7	**O**		
3055	Code list responsible agency code	C an..3	**O**		5 = ISO (International Organization for Standardization)

Segment Notes:

This segment is used to specify any technical rules which relate to the product group.

Example :
TRU+9001+2+1+4+5'
Part 4 of the technical rule 9001, version 2, release 1, issued by ISO.

5. Segments Layout

Segment number: 135

SG17	- C	1000 -	PGI-DTM-QTY-ALI-FTX-SG18-SG19-SG20-SG21-SG27-SG30-SG31-SG32-SG33-SG34-SG35-SG36
SG36	- C	999999 -	LIN-PIA-IMD-MEA-QTY-HAN-ALI-DTM-RFF-LOC-FTX-SG37-SG38-SG40-SG41-SG47-SG48-SG51-SG52-SG54-SG55-SG56
SG54	- C	9 -	TRU-DTM
DTM	- C	9 -	Date/time/period

Function:

To specify date, and/or time, or period.

		EDIFACT	GS1	*	Description
C507	DATE/TIME/PERIOD	M	**M**		
2005	Date or time or period function code qualifier	M an..3	**M**		261 = Release date/time
2380	Date or time or period value	C an..35	**R**		
2379	Date or time or period format code	C an..3	**R**		

Segment Notes:

This segment is used to specify the release date of the technical rules given in the previous TRU segment.

Example:
DTM+261:20020905:102'

5. Segments Layout

Segment number: 136

SG17	- C	1000 -	PGI-DTM-QTY-ALI-FTX-SG18-SG19-SG20-SG21-SG27-SG30-SG31-SG32-SG33-SG34-SG35-SG36
SG36	- C	999999 -	LIN-PIA-IMD-MEA-QTY-HAN-ALI-DTM-RFF-LOC-FTX-SG37-SG38-SG40-SG41-SG47-SG48-SG51-SG52-SG54-SG55-SG56
SG55	- C	9 -	DGS-QTY-FTX
DGS	- M	1 -	Dangerous goods

Function:

To identify dangerous goods.

		EDIFACT	GS1	*	Description
8273	Dangerous goods regulations code	C an..3	**O**		ADR = European agreement regarding the total carriage of dangerous goods CFR = 49 code of federal regulations RID = Rail/road dangerous goods book (RID)
C205	HAZARD CODE	C	**O**		
8351	Hazard identification code	M an..7	**M**		Classification according ADR/RID rules
8078	Additional hazard classification identifier	C an..7	**O**		Additional according ADR/RID rules
8092	Hazard code version identifier	C an..10	**O**		
C234	UNDG INFORMATION	C	**O**		
7124	United Nations Dangerous Goods (UNDG) identifier	C n4	**O**		
7088	Dangerous goods flashpoint value	C an..8	**O**		Declaration of the flashpoint.
C223	DANGEROUS GOODS SHIPMENT FLASHPOINT	C	**O**		
7106	Shipment flashpoint value	C n3	**O**		
6411	Measurement unit code	C an..3	**O**		
8339	Packaging danger level code	C an..3	**O**		1 = Great danger 2 = Medium danger 3 = Minor danger
8364	Emergency procedure for ships identifier	C an..6	**O**		Only for emergency procedure on ships.
8410	Hazard medical first aid guide identifier	C an..4	**O**		
8126	Transport emergency card identifier	C an..10	**O**		TREM card number according ADR.
C235	HAZARD IDENTIFICATION PLACARD DETAILS	C	**O**		
8158	Orange hazard placard upper part identifier	C an..4	**O**		Danger signs upper part.
8186	Orange hazard placard lower part identifier	C an4	**O**		Danger signs lower part.
C236	DANGEROUS GOODS LABEL	C	**O**		According ADR, FID, IMDG-code, IATA-DGR.
8246	Dangerous goods marking identifier	C an..4	**O**		Number of dangerous goods document primary hazard.
8246	Dangerous goods marking	C an..4	**O**		Number of dangerous goods document secondary

5. Segments Layout

Segment number: 136

		EDIFACT	GS1	*	Description
	identifier				hazard.
8246	Dangerous goods marking identifier	C an..4	**O**		
8255	Packing instruction type code	C an..3	**O**		
8325	Hazardous means of transport category code	C an..3	**O**		Only used by air carrier.
8211	Hazardous cargo transport authorisation code	C an..3	**O**		

Segment Notes:

This segment is used to indicate whether the current line item is dangerous or hazardous. The identification of any relevant regulations concerning dangerous goods is possible in this segment.

Example :
DGS+ADR+3B+1178+21:CEL'
The dangerous goods are classified according to the ADR class 3B (extremely flammable liquid) with the UN number 1178 and a flashpoint of 21 degrees celsius.

5. Segments Layout

Segment number: 137

SG17	- C	1000 -	PGI-DTM-QTY-ALI-FTX-SG18-SG19-SG20-SG21-SG27-SG30-SG31-SG32-SG33-SG34-SG35-SG36
SG36	- C	999999 -	LIN-PIA-IMD-MEA-QTY-HAN-ALI-DTM-RFF-LOC-FTX-SG37-SG38-SG40-SG41-SG47-SG48-SG51-SG52-SG54-SG55-SG56
SG55	- C	9 -	DGS-QTY-FTX
QTY	- C	9 -	Quantity

Function:

To specify a pertinent quantity.

		EDIFACT	GS1	*	Description
C186	QUANTITY DETAILS	M	**M**		
6063	Quantity type code qualifier	M an..3	**M**		23 = Active ingredient
6060	Quantity	M an..35	**M**		
6411	Measurement unit code	C an..3	**D**		

Segment Notes:

This segment is used to specify the quantities relevant to the dangerous goods information.
Example:
QTY+23:20:KGM'

5. Segments Layout

Segment number: 138

SG17	- C	1000 -	PGI-DTM-QTY-ALI-FTX-SG18-SG19-SG20-SG21-SG27-SG30-SG31-SG32-SG33-SG34-SG35-SG36
SG36	- C	999999 -	LIN-PIA-IMD-MEA-QTY-HAN-ALI-DTM-RFF-LOC-FTX-SG37-SG38-SG40-SG41-SG47-SG48-SG51-SG52-SG54-SG55-SG56
SG55	- C	9 -	DGS-QTY-FTX
FTX	- C	9 -	Free text

Function:

To provide free form or coded text information.

		EDIFACT	GS1	*	Description
4451	Text subject code qualifier	M an..3	**M**		AAC = Dangerous goods additional information AAD = Dangerous goods, technical name HAN = Handling instructions HAZ = Hazard information PAC = Packing/marking information ZZZ = Mutually defined
4453	Free text function code	C an..3	**O**	*	1 = Text for subsequent use
C107	TEXT REFERENCE	C	**D**		This composite is only used when trading partners have agreed to use mutually defined code values.
4441	Free text value code	M an..17	**M**		
1131	Code list identification code	C an..17	**O**		
3055	Code list responsible agency code	C an..3	**D**		
C108	TEXT LITERAL	C	**D**		This composite is only used if coded text can not be used.
4440	Free text value	M an..512	**M**		
4440	Free text value	C an..512	**O**		
4440	Free text value	C an..512	**O**		
4440	Free text value	C an..512	**O**		
4440	Free text value	C an..512	**O**		
3453	Language name code	C an..3	**D**		ISO 639 two alpha code This data element is only used when non coded free text has been provided in data element C108.
4447	Free text format code	C an..3	**N**		

Segment Notes:

This segment is used to specify any additional free text information required for the dangerous goods.
Use of this segment in free form is not recommended since it may inhibit automatic processing of the Price/sales catalogue message. Coded references to standard texts is an available functionality which enables automatic processing and reduces transmission overheads. Standard texts should be mutually defined between trading partners and can be used to cover legal or other requirements.

Example :
FTX+AAC+1+992'
(Code value 992 = Handle with extreme caution, unstable liquids.)

5. Segments Layout

Segment number: 139

SG17	- C	1000 -	PGI-DTM-QTY-ALI-FTX-SG18-SG19-SG20-SG21-SG27-SG30-SG31-SG32-SG33-SG34-SG35-SG36
SG36	- C	999999 -	LIN-PIA-IMD-MEA-QTY-HAN-ALI-DTM-RFF-LOC-FTX-SG37-SG38-SG40-SG41-SG47-SG48-SG51-SG52-SG54-SG55-SG56
SG56	- C	999 -	HYN-PIA-QTY-SG58
HYN	- M	1 -	Hierarchy information

Function:

A segment to identify hierarchical connections from a given item to a higher or lower levelled item or to identify dependencies among the content of hierarchically related groups of data.

		EDIFACT	GS1	*	Description
7173	Hierarchy object code qualifier	M an..3	**M**		2 = Product 33 = Associated accessory
7171	Hierarchical structure relationship code	C an..3	**R**		1 = Parent 2 = Child This data element is used to indicate whether the item number (DE 7140) specified in this segment is a parent or child product of the current line item.
1229	Action request/notification description code	C an..3	**A**		
C212	ITEM NUMBER IDENTIFICATION	C	**C**		
7140	Item identifier	C an..35	**R**		
7143	Item type identification code	C an..3	**R**		AC = HIBC (Health Industry Bar Code) IB = ISBN (International Standard Book Number) IN = Buyer's item number PV = Promotional variant number SA = Supplier's article number SRV = GS1 Global Trade Item Number
1131	Code list identification code	C an..17	**O**		
3055	Code list responsible agency code	C an..3	**D**		9 = GS1 91 = Assigned by supplier or supplier's agent 92 = Assigned by buyer or buyer's agent
7166	Hierarchical structure parent identifier	C an..35	**N**		

Segment Notes:

This segment is used to provide hierarchical product information related to the current line item.

Example:
HYN+2+2++5410013111009:SRV'
This example indicates that the GTIN 5410013111009 is a child in the product hierarchy to the GTIN 5412345123453 identified in the LIN segment.

5. Segments Layout

Segment number: 140

SG17	- C	1000 -	PGI-DTM-QTY-ALI-FTX-SG18-SG19-SG20-SG21-SG27-SG30-SG31-SG32-SG33-SG34-SG35-SG36
SG36	- C	999999 -	LIN-PIA-IMD-MEA-QTY-HAN-ALI-DTM-RFF-LOC-FTX-SG37-SG38-SG40-SG41-SG47-SG48-SG51-SG52-SG54-SG55-SG56
SG56	- C	999 -	HYN-PIA-QTY-SG58
PIA	- C	99 -	Additional product id

Function:

To specify additional or substitutional item identification codes.

		EDIFACT	GS1	*	Description
4347	Product identifier code qualifier	M an..3	**M**		1 = Additional identification
C212	ITEM NUMBER IDENTIFICATION	M	**M**		
7140	Item identifier	C an..35	**R**		
7143	Item type identification code	C an..3	**R**		PV = Promotional variant number X10 = Lottery game number (GS1 Temporary Code) X11 = Lottery pack book number (GS1 Temporary Code) X12 = NABCA product code (GS1 Temporary Code)
1131	Code list identification code	C an..17	**O**		
3055	Code list responsible agency code	C an..3	**D**		
C212	ITEM NUMBER IDENTIFICATION	C	**O**		
7140	Item identifier	C an..35	**R**		
7143	Item type identification code	C an..3	**R**		
1131	Code list identification code	C an..17	**O**		
3055	Code list responsible agency code	C an..3	**D**		
C212	ITEM NUMBER IDENTIFICATION	C	**O**		
7140	Item identifier	C an..35	**R**		
7143	Item type identification code	C an..3	**R**		
1131	Code list identification code	C an..17	**O**		
3055	Code list responsible agency code	C an..3	**D**		
C212	ITEM NUMBER IDENTIFICATION	C	**O**		
7140	Item identifier	C an..35	**R**		
7143	Item type identification code	C an..3	**R**		
1131	Code list identification code	C an..17	**O**		
3055	Code list responsible agency code	C an..3	**D**		
C212	ITEM NUMBER IDENTIFICATION	C	**O**		

5. Segments Layout

Segment number: 140

		EDIFACT	GS1	*	Description
7140	Item identifier	C an..35	**R**		
7143	Item type identification code	C an..3	**R**		
1131	Code list identification code	C an..17	**O**		
3055	Code list responsible agency code	C an..3	**D**		

Segment Notes:

This segment is used to provide a promotional variant number which is part of the identification of a product.

Example:
PIA+1+4711XX:PV::91'

5. Segments Layout

Segment number: 141

SG17	- C	1000 -	PGI-DTM-QTY-ALI-FTX-SG18-SG19-SG20-SG21-SG27-SG30-SG31-SG32-SG33-SG34-SG35-SG36
SG36	- C	999999 -	LIN-PIA-IMD-MEA-QTY-HAN-ALI-DTM-RFF-LOC-FTX-SG37-SG38-SG40-SG41-SG47-SG48-SG51-SG52-SG54-SG55-SG56
SG56	- C	999 -	HYN-PIA-QTY-SG58
QTY	- C	9 -	Quantity

Function:

To specify a pertinent quantity.

		EDIFACT	GS1	*	Description
C186	QUANTITY DETAILS	M	**M**		
6063	Quantity type code qualifier	M an..3	**M**		17E = Number of units in lower packaging or configuration level (GS1 Temporary Code)
6060	Quantity	M an..35	**M**		
6411	Measurement unit code	C an..3	**D**		This data element is only used if the product being identified is of variable quantity.

Segment Notes:

This segment is used to specify quantity information related to the current hierarchical product.

Example:
QTY+17E:48'

5. Segments Layout

Segment number: 142

SG17	- C	1000 -	PGI-DTM-QTY-ALI-FTX-SG18-SG19-SG20-SG21-SG27-SG30-SG31-SG32-SG33-SG34-SG35-SG36
SG36	- C	999999 -	LIN-PIA-IMD-MEA-QTY-HAN-ALI-DTM-RFF-LOC-FTX-SG37-SG38-SG40-SG41-SG47-SG48-SG51-SG52-SG54-SG55-SG56
SG56	- C	999 -	HYN-PIA-QTY-SG58
SG58	- C	9 -	CCI-CAV-MEA
CCI	- M	1 -	Characteristic/class id

Function:

To identify and describe a specific characteristic and its relevance for subsequent business processes.

		EDIFACT	GS1	*	Description
7059	Class type code	C an..3	**O**		11 = Product
C502	MEASUREMENT DETAILS	C	**N**		
6313	Measured attribute code	C an..3	**O**		
6321	Measurement significance code	C an..3			
6155	Non-discrete measurement name code	C an..17			
6154	Non-discrete measurement name	C an..70			
C240	PRODUCT CHARACTERISTIC	C	**O**		
7037	Characteristic description code	M an..17	**M**		This data element is used to identify the characteristics of the currently identified hierarchy in user coded form. As no EDIFACT code list exists for this data element codes should be from the EANCOM code list or be allocated depending on the requirements of the user. Should it not be possible to provide a user code in this data element and a free form characteristic description is used in data element 7036, then it is recommended that the code value 'ZZZ' be put in data element 7037 (which is mandatory).
1131	Code list identification code	C an..17	**O**		
3055	Code list responsible agency code	C an..3	**D**		9 = GS1 60 = Assigned by national trade agency 91 = Assigned by supplier or supplier's agent 92 = Assigned by buyer or buyer's agent
7036	Characteristic description	C an..35	**O**		This data element is used to provide free form text characteristics for use where no coded values exist in data element 7037.
7036	Characteristic description	C an..35	**O**		
4051	Characteristic relevance code	C an..3	**N**		

Segment Notes:

This segment is used to specify characteristics related to the currently identified hierarchy.

Example:
CCI+11++386::91'
This example indicates that the characteristic being identified is identified by the supplier assigned code value 386 (e.g. a computer system control board).

5. Segments Layout

Segment number: 143

SG17	- C	1000 -	PGI-DTM-QTY-ALI-FTX-SG18-SG19-SG20-SG21-SG27-SG30-SG31-SG32-SG33-SG34-SG35-SG36
SG36	- C	999999 -	LIN-PIA-IMD-MEA-QTY-HAN-ALI-DTM-RFF-LOC-FTX-SG37-SG38-SG40-SG41-SG47-SG48-SG51-SG52-SG54-SG55-SG56
SG56	- C	999 -	HYN-PIA-QTY-SG58
SG58	- C	9 -	CCI-CAV-MEA
CAV	- C	9 -	Characteristic value

Function:

To provide the value of a characteristic.

		EDIFACT	GS1	*	Description
C889	CHARACTERISTIC VALUE	M	**M**		
7111	Characteristic value description code	C an..3	**A**		This data element is used to provide characteristic values. As no EDIFACT code list exists for this data element codes should be allocated depending on the requirements of the user. 1 = Chest/bust width 2 = Hip width 3 = Outside leg length
1131	Code list identification code	C an..17	**O**		
3055	Code list responsible agency code	C an..3	**D**		9 = GS1 60 = Assigned by national trade agency 91 = Assigned by supplier or supplier's agent 92 = Assigned by buyer or buyer's agent
7110	Characteristic value description	C an..35	**O**		
7110	Characteristic value description	C an..35	**O**		

Segment Notes:

This segment is used to further specify characteristic for the current hierarchy.

Example:
CAV+22::91'
When used in combination with the CCI segment example, the supplier code 22 indicates the fact that there is a 386 chip in the system control board.
CAV+CHE:SZT:9'
CAV+HIP:SZT:9'
CAV+OLG:SZT:9'

5. Segments Layout

Segment number: 144

SG17	- C	1000 -	PGI-DTM-QTY-ALI-FTX-SG18-SG19-SG20-SG21-SG27-SG30-SG31-SG32-SG33-SG34-SG35-SG36
SG36	- C	999999 -	LIN-PIA-IMD-MEA-QTY-HAN-ALI-DTM-RFF-LOC-FTX-SG37-SG38-SG40-SG41-SG47-SG48-SG51-SG52-SG54-SG55-SG56
SG56	- C	999 -	HYN-PIA-QTY-SG58
SG58	- C	9 -	CCI-CAV-MEA
MEA	- C	99 -	Measurements

Function:

To specify physical measurements, including dimension tolerances, weights and counts.

		EDIFACT	GS1	*	Description
6311	Measurement purpose code qualifier	M an..3	**M**		PD = Physical dimensions (product ordered) SV = Specification value
C502	MEASUREMENT DETAILS	C	**A**		
6313	Measured attribute code	C an..3	**A**		AAA = Unit net weight DI = Diameter DP = Depth HT = Height dimension LN = Length dimension TH = Thickness
6321	Measurement significance code	C an..3	**O**		3 = Approximately 4 = Equal to
6155	Non-discrete measurement name code	C an..17	**O**		
6154	Non-discrete measurement name	C an..70	**N**		
C174	VALUE/RANGE	C	**R**		
6411	Measurement unit code	M an..3	**M**		
6314	Measurement value	C an..18	**O**		
6162	Range minimum value	C n..18	**O**		
6152	Range maximum value	C n..18	**O**		
6432	Significant digits quantity	C n..2	**N**		
7383	Surface or layer code	C an..3	**N**		

Segment Notes:

This segment is used to specify any measurements related to the currently identified hierarchy characteristic class.

Example:
MEA+PD+LN:4+MTR:8'

5. Segments Layout

Segment number: 145

UNT - M 1 - Message trailer					
Function: To end and check the completeness of a message.					
		EDIFACT	GS1	*	Description
0074	Number of segments in the message	M n..6	**M**		The total number of segments in the message is detailed here.
0062	Message reference number	M an..14	**M**		The message reference numbered detailed here should equal the one specified in the UNH segment.
Segment Notes: This segment is a mandatory UN/EDIFACT segment. It must always be the last segment in the message. Example: UNT+141+ME000001'					

5. Segments Layout

Segment number: 146

UNZ - M 1 - Interchange trailer					
Function: To end and check the completeness of an interchange.					
		EDIFACT	GS1	*	Description
0036	Interchange control count	M n..6	**M**		Number of messages or functional groups within an interchange.
0020	Interchange control reference	M an..14	**M**		Identical to DE 0020 in UNB segment.
Segment Notes: This segment is used to provide the trailer of an interchange. UNZ+5+12345555' DE 0036: If functional groups are used, this is the number of functional groups within the interchange. If functional groups are not used, this is the number of messages within the interchange.					

Example 1 - Addition of New Lines

The following is an example of a Price/Sales Catalogue message providing the addition of a new despatch unit, traded unit, and consumer unit to a trading partner's file. The relationship or hierarchy between the different product levels is detailed through the use of sub-lines.

The supplier sending the message is identified by GLN 4012345500004 with a Tax Registered number of VR95745. The potential buyer is identified by GLN 5412345000020 with a Tax Registered number of VR12345. The trading terms are those agreed upon in the contract 5622ABE of the 10th August 2002.

The message, sent the 1st October 2002 has been given the reference number PC32458, provides the identification of three levels (of the hierarchy) a new product, Corn Crispies, as a despatch unit, a trade unit and a consumer unit. The relationship between the three levels is achieved through the use of the sub-line function in the LIN segment.

The price list currency is specified as Euros.

The first occurrence of LIN, with line number 1, is used to describe the consumer unit identified by the GTIN 5410738377131, being the code for a box of Healthiest Corn Crispies. It is further identified by the supplier's article number CU32555. The handling instructions indicate that the box contains foodstuffs. The suggested retail price of the product is 40 EUR and VAT is charged at 21 percent. No sub-lines are used since there is no reference to a smaller unit.

The second occurrence of LIN, with line number 2, is used to describe the trade unit identified by the GTIN 5410738377117, being the code for a case of Corn Crispies. It is further identified by the supplier's article number TU32555. The handling instructions indicate that the case contains foodstuffs. The country of origin of the product is Belgium and it is priced at 500 EUR per case with an 8 percent discount for orders over 48 cases. VAT is charged at 21 percent and the packaging of the product is described as a carton.

The third occurrence of LIN, with line number 3, is used to indicate that the consumer unit previously identified by the GTIN 5410738377131 is a sub-line of the trade unit identified by the GTIN 5410738377117. There are 48 consumer units contained in the traded unit.

The fourth occurrence of LIN, with line number 4, is used to describe the despatch unit identified by the GTIN 5410738251028, being the code for a pallet of Corn Crispies. The suppliers internal part number for the despatch unit is PN32555. The handling instructions for the despatch unit describe the pallet as containing foodstuffs which is susceptible to frost damage. The price for the despatch unit is 12000 EUR with an allowance of 10 percent if more than 50 pallets are ordered. VAT is charged at 21 percent.

The fifth occurrence of LIN, with line number 5, is used to indicate that the traded unit previously identified (LIN 2) by the GTIN 5410738377117 is a sub-line of the despatch unit identified by the GTIN 5410738251028. Each despatch unit contains 24 traded units.

UNH+ME000001+PRICAT:D:01B:UN:EAN009'	Message header
BGM+9+PC32458+9'	Price/sales catalogue number PC32458
DTM+137:20021001:102'	Message date 1st October 2002
RFF+CT:5622ABE'	Price list is related to contract number 5622ABE
DTM+171:20020810:102'	Contract date 10th of August 2002
NAD+BY+5412345000020::9'	Buyer is identified by GLN 5412345000020
RFF+VA:VR12345'	Buyer's VAT number VR12345
NAD+SU+4012345500004::9'	Supplier is identified by GLN 4012345500004
RFF+VA:VR95745'	Supplier's VAT number is VR95745
CUX+2:EUR:8'	Price list currency is Euros

6. Examples

PGI+2'	Product group containing no price group
LIN+1+1+5410738377131:SRV'	Line item 1, an addition, is identified by GTIN 5410738377131
PIA+1+CU32555:SA'	Supplier's article number CU32555 is provided as an additional identification
IMD+C++CU::9'	Current line item is a consumer unit
IMD+F++:::HEALTHIEST CORN CRISPIES:BOX'	Product description
MEA+PD+AAA:4+GRM:250'	The net weight of the consumer unit is 250 grms
HAN+EAT::9'	The product is foodstuffs
TAX+7+VAT+++:::21+S'	The product is subject to the standard rate of 21% VAT
PRI+AAE:40:CA:SRP'	The suggested retail information price, including allowances/charges and taxes, is 40
PAC+++BX'	The consumer unit is packaged in a box
MEA+PD+HT+MMT:200'	The height of the box is 200 mm
MEA+PD+LN+MMT:80'	The length of the box is 80 mm
MEA+PD+WD+MMT:30'	The width of the box is 30 mm
LIN+2+1+5410738377117:SRV'	Line item 2, an addition, is identified by GTIN 5410738377117
PIA+1+TU32555:SA'	Supplier's article number TU32555 is provided as an additional identification
IMD+C++TU::9'	Current line item is a trade unit
IMD+F++:::CORN CRISPIES:CASE'	Product description
HAN+EAT::9'	The product is foodstuffs
ALI+BE'	Country of origin is Belgium
TAX+7+VAT+++:::21+S'	Product is subject to the standard VAT rate of 21%
PRI+AAB:500:CA'	The calculation gross price for the product is 500
ALC+A+++1'	An allowance exists for this product
PCD+3:8'	Allowance of 8%
RNG+1+PCE:48'	Is available on purchase of a minimum quantity of 48
PAC+++CT'	The product is packaged in a carton
LIN+3+1+5410738377131:SRV+1:2'	Line number 3, identified by GTIN 5410738377131, is a sub-line of line number 2
QTY+45E:48'	Number of consumer units in trade unit is 48
LIN+4+1+5410738251028:SRV'	Line item 4, an addition, is identified by GTIN 5410738251028

PIA+1+PN32555:SA'	Supplier's article number PN32555 is provided as an additional identification
IMD+C++DU:9'	Product is a despatch unit
IMD+F++:::CORN CRISPIES:PALLET'	Product description
HAN+EAT::9'	The product is foodstuffs
HAN+FTD::9'	The product is susceptible to frost damage
TAX+7+VAT+++:::21+S'	The product is subject to the standard VAT rate of 21%
PRI+AAA:24000:CA'	The calculation net price for the product is 24000
ALC+A+++1'	An allowance exists for this product
PCD+1:10'	Allowance of 10%
RNG+1+PCE:50'	Is available on purchases of a minimum quantity of 50
PAC+++201::9'	The product is packaged on an ISO 1 pallet
LIN+5+1+5410738377117:SRV+1:4'	Line number 5, identified by GTIN 5410738377117 , is a sub-line of line number 4
QTY+45E:24'	Number of traded units in despatch unit is 24
UNT+52+ME000001'	Total number of segments in the message equals 52

Example 2 - Amendment of Traded Unit information

The following is an example of a Price/Sales Catalogue message providing the amendment of a products traded unit information.

The supplier sending the message is identified by GLN 4012345500004, and the Tax Registered number of VR95745. The potential buyer is identified by GLN 5412345000020, and the Tax Registered number of VR12345. The trading terms are those agreed upon in the contract 5622ABE of the 10th August 2002.

The message, sent the 1st November 2002 has been given the reference number PC32480, provides the code for the traded unit which is to be amended.

The price list currency is specified as Euros.

The LIN/PIA segments are used to identify the traded unit. The GTIN 5410738377117 is identified in the LIN segment. Only the information relevant to the change is included. The new case price is 480 EUR with a 12 percent discount for orders over 52 cases.

UNH+ME000035+PRICAT:D:01B:UN:EAN009'	Message header
BGM+25E::9+PC32480+4'	Price/sales catalogue containing only pricing information number PC32480
DTM+137:20021101:102'	Message date 1st of November 2002
RFF+CT:5622ABE'	Message relates to contract number 5622ABE
DTM+171:20020810:102'	Contract date 10th of August 2002
NAD+BY+5412345000020::9'	Buyer is identified by GLN 5412345000020

RFF+VA:VR12345'	Buyer's VAT number VR12345
NAD+SU+4012345500004::9'	Supplier is identified by GLN 4012345500004
RFF+VA:VR95745'	Supplier's VAT number is VR95745
CUX+2:EUR:8'	Price list currency is Euros
PGI+2'	Product group containing no price group
LIN+1+3+5410738377117:SRV'	Line item 1 identified GTIN 5410738377117, which is being amended
PRI+AAB:480:CA'	Calculation gross price is 480
ALC+A+++1'	An allowance exists for this product
PCD+1:12'	Allowance of 12%
RNG+1+PCE:52'	Is available on purchases of a minimum quantity of 52
UNT+17+ME000035'	Total number of segments in the message equals 17

Example 3 - Deletion of the full Product Hierarchy

The following is an example of a Price/Sales Catalogue message requesting the deletion of a full product hierarchy, i.e., Despatch Unit, Traded Unit and Consumer Unit.

The supplier sending the message is identified by GLN 4012345500004, and the Tax Registered number of VR95745. The potential buyer is identified by GLN 5412345000020, and the Tax Registered number of VR12345. The trading terms are those agreed upon in the contract 5622ABE of the 10th August 2002.

The message, sent the 21st December 2002 has been given the reference number PC32888, provides codes for the despatch unit, the traded unit, and finally the consumer unit, all of which are to be deleted. At all three levels the Action Request Code is set to 2, Deletion. The deletion of any sub-levels in the product hierarchy must be handled by the message receiver, i.e. the message sender needs only to send the main line, the receiver must delete all related sub-lines.

UNH+ME000052+PRICAT:D:01B:UN:EAN009'	Message header
BGM+9+PC32888+4'	Price sales catalogue number PC32888
DTM+137:20021221:102'	Message date
RFF+CT:5622ABE'	Price list relates to contract 5622ABE
DTM+171:20020810:102'	Contract date 10th of August 2002
NAD+BY+5412345000020::9'	Buyer is identified by GLN 5412345000020
RFF+VA:VR12345'	Buyer's VAT number VR12345
NAD+SU+4012345500004::9'	Supplier identified by GLN 4012345500004
RFF+VA:VR95745'	Supplier's VAT number VR95745
PGI+2'	Product group containing no price group
LIN+1+2+5410738251028:SRV'	Deletion of line 1 identified by GTIN 5410738251028 and any associated sub-lines

LIN+2+2+5410738377117:SRV'	Deletion of line 2 identified by GTIN 5410738377117 and any associated sub-lines
LIN+3+2+5410738377131:SRV'	Deletion of line 3 identified by GTIN 5410738377131 and any associated sub-lines
UNT+14+ME000052'	Total number of segments in the message equals 14

Example 4 - Addition of a set or mixed pack

The following is an example of a Price/Sales Catalogue message providing the addition of a set or mixed pack consisting of two articles already known by the recipient of the information and one article new to the recipient.

The supplier sending the message is identified by GLN 4012345500004. The potential buyer is identified by GLN 5412345000020.

The message sent the first of January 2002 has been given the reference number PC12123, provides a description of the new product, First Aid set, consisting of three products in different quantities.

The price list currency is specified as Euros.

The first occurrence of the LIN segment is used to describe one component of the mixed pack that is new to the buyer. This article is identified by GTIN 8711113000000. The article is a consumer unit packed in a box. The suggested retail price of the product is 400 EUR and VAT is charged at 21 percent.

The second occurrence of the LIN segment is used to describe the mixed pack, identified with GTIN 5410738251028. The mixed pack is a consumer unit. The set is packed in a box which should be handled with care. The suggested retail price of the product is 900 EUR and VAT is charged at 21 percent.

The third, fourth and fifth occurrence of the LIN segments are used to refer to the articles inside the mixed pack. The articles are identified by the GTINs 8711112000001, 8711111000002 and 8711113000000. The quantity of each article inside the mixed pack is given.

Because two of the articles inside the mixed pack are already known by the buyer no further description of these articles is required.

UNH+ME000055+PRICAT:D:01B:UN:EAN009'	Message header
BGM+9+PC12123+9'	Price/sales catalogue number PC12123
DTM+137:20020101:102'	Message date 1st January 2002
NAD+BY+5412345500020::9'	Buyer is identified by GLN 5412345500020
NAD+SU+4012345500004::9'	Supplier is identified by GLN 4012345500004
CUX+2:EUR:8'	Price list currency is Euros
PGI+2'	Product group containing no price group
LIN+1+1+8711113000000:SRV'	Line 1 is an addition of the product identified by GTIN 8711113000000
IMD+C++CU::9'	The product is a consumer unit
IMD+F++:::SCALPEL TYPE AX157'	Product description
MEA+PD+AAA+GRM:98'	Weight of the product is 98 grams
MEA+PD+LN+MMT:170'	Length of the product is 170 mm

TAX+7+VAT+++:::21+S'	Product is subject to VAT at the standard rate of 21%
PRI+AAE:400:CA:SRP'	The suggested retail information price, excluding allowances/charges and taxes, is 400
PAC+++BX'	Product is packaged in a box
LIN+2+1+5410738251028:SRV'	Line 2 is an addition of the product identified by GTIN 5410738251028
IMD+C++CU::9'	Product is a consumer unit
IMD+F++:::FIRST AID SET: RED CROSS TYPE A'	Product description
MEA+PD+AAB+GRM:850'	Product weight is 850 grams
QTY+17E:35'	The total quantity of all the articles contained in the first aid set is 35
HAN+HWC::9'	Product should be handled with care
TAX+7+VAT+++:::21+S'	Product is subject to the standard rate of 21% VAT
PRI+AAE:900:CA:SRP'	The suggested retail information price, excluding allowances/charges and taxes, is 900
PAC+++BX'	The product is packaged in a box
MEA+PD+HT+MMT:500'	The box is 500 mm high
MEA+PD+LN+MMT:200'	The box is 200 mm long
MEA+PD+WD+MMT:50'	The box is 50 mm wide
LIN+3+1+8711112000001:SRV+1:2’	Line 3 is an addition of the product identified by GTIN 8711112000001, to the configuration specified in line number 2 using sublines
QTY+45E:10'	Number of units contained in the first aid set 10
LIN+4+1+8711111000002:SRV+1:2’	Line 4 is an addition of the product identified by GTIN 8711111000002 , to the configuration specified in line number 2 using sublines
QTY+45E:20'	Number of units contained in the first aid set 20
LIN+5+1+8711113000000:SRV+1:2’	Line 5 is an addition of the product identified by GTIN 8711111000000 , to the configuration specified in line number 2 using sublines
QTY+45E:5'	Number of units contained in the first aid set 5
UNT+34+ME000055'	Total number of segments in the message equals 34

Example 5 - Response to Price/Sales Catalogue

The following is an example of a Response to Price/Sales Catalogue message. The buyer sending the message is identified by GLN 5412345000020. The supplier receiving the message is identified by GLN 4012345500004.

6. Examples

The message, sent the 21st December 2002 has been given the reference number PC34888 accepts in full the Price/Sales Catalogue number AVS321 transmitted on the 15th of December 2002

UNH+ME000052+PRICAT:D:01B:UN:EAN009'	Message header
BGM+51+PC34888+29'	Price sales catalogue response number PC34888
DTM+137:20021221:102'	Message date
RFF+PL:AVS321'	Price catalogue response relates to the price list number AVS321
DTM+171:20021215:102'	Price list date 15th of December 2002
NAD+BY+5412345000020::9'	Buyer is identified by GLN 5412345000020
NAD+SU+4012345500004::9'	Supplier identified by GLN 4012345500004
UNT+8+ME000052'	Total number of segments in the message equals 8

Note:
The EDI interchange will include the UNB..UNZ segments and, if applicable, the UNG..UNE segments. (see Part I section 5.7).